All Sport® 5000
Control Console

Operations Manual

ED-11976 ***Rev 16 – 10 September 2007***

DAKTRONICS

331 32nd Avenue PO Box 5128 Brookings, SD 57006-5128
tel 800-325-8766 605-697-4300 fax 605-697-4700
www.daktronics.com email: sales@daktronics.com

DAKTRONICS

ED-11976
Product 1196
Rev 16 – 10 September 2007

DAKTRONICS, INC.

Copyright © 2003-07
All rights reserved. While every precaution has been taken in the preparation of this manual, the publisher assumes no responsibility for errors or omissions. No part of this book covered by the copyrights hereon may be reproduced or copied in any form or by any means – graphic, electronic, or mechanical, including photocopying, taping, or information storage and retrieval systems – without written permission of the publisher.

All Sport®, DakStats®, OmniSport®, Tuff Sport™ and Venus® are trademarks of Daktronics, Inc.

Table of Contents

Section 1: Introduction 1

Important Safeguards 1
1.1 Console Overview 2
1.2 Revision History 2

Section 2: Basic Operation 21

2.1 Console Operation 21
2.2 Sport Inserts 21
2.3 Sport Insert Operation Concepts 22
2.4 Start Up 23
2.5 Setting Radio Channels 24
Single Controller Systems Channel Setting 28
Multiple Controller w/Single Broadcast Group Channel Setting 29
Multiple Controller w/Multiple Broadcast Systems Channel Setting 30
2.6 Standard Keys 31
Start 31
Stop 31
Enter/Yes 32
Clear/No 32
Edit 32
Menu 32
Set Main Clock 33
Count Up/Down 36
Auto Horn 36
Manual Horn 36
2.7 Remote Start/Stop Controls 36
Main Clock Control 36
Shot Clock Control 37
2.8 General Multi-Purpose Timer Information 37
Standard Keys 37
Accessing the Multi-Purpose Timer 37
Accessing the Segment Timer 38

Section 3: Segment Timer 39

3.1 Segment Timer Overview 39
3.2 Accessing Segment Timer 40
3.3 Accessing 2-Digit or 6-Digit Display Segment Timer 40
3.4 Segment Timer Keys 41
Segment No • Time • 41
First Segment 41
Last Segment 42
Interval Time 42
Display Interval 42
Copy Range 43
Auto Stop 43

Reset to First 43
Reset Current Segment 43
Current Segment 44
Default Settings 44
3.5 Edit 44
Current Segment 44
3.6 Menu 44
New Code 45
Warning Time 45
Dim/Bright 45

Section 4: Baseball Operations 47

Write the correct code number here. 47
4.1 Baseball Keys 47
Inning +1 47
Out +1 48
Batter, Average, Clear Batter/Average 48
Ball Count, Strike Count, Clear Count 49
Hit, Error, Clear Hit/Error 49
At Bat 50
Runs 50
Hits, Errors, Left on Base 51
Pitch Count, Foul Balls, In Play 51
4.2 Edit 51
Inning +1 51
Runs 52
Hits, Errors, Left on Base 52
4.3 Menu 53
New Game 53
New Code 53
Home Roster, Guest Roster 54
Display Menu 55
Edit Settings 57
Time of Day 57
4.4 Settings 58
Main Clock 58
Error Position 59
Auto Increment Pitches 59
Auto Increment Inning 60
Score by Inning 60
Inning Sequence 60
Display Innings 61
Display Time 62
Select Captions 62
Switch Output 62
Default Settings 63

Section 5: Pitch and Speed 65

5.1 General Pitch and Speed Information 65

5.2 Pitch and Speed Keys 65
Pitch Keys 65
Display Speed 65
Blank Time 66
Speed 66
Show MPH and Show KPH 66
Cycle MPH/KPH and Cycle KPH/MPH 66
Cycle Time 66
Pitch Count Keys (Home and Guest) 67
Clear Pitch Count 67
Display Home/Guest Count 67
5.3 Menu 67
New Game 67
New Code 68
Dimming Menu 68
Radar Gun Type 68
Speed Adjust Coefficient 69
Select Speed 69
Speed Indicator 70
Display Mode 70
Default Settings 70
RTD Item Numbers 71
Frame Number and Pitch Types 72

Section 6: Clock Console Operation 73

6.1 Clock Console Codes 73
6.2 Clock Console Keys 73
Timer Start 73
Timer Stop 73
Set Timer Time 74
Set Reset Time 1 74
Set Reset Time 2 74
Timer Reset 1 74
Timer Reset 2 74
6.3 Menu 74
6.4 Settings 75

Section 7: Basketball Operations 77

Write the correct code number here. 77
7.1 Basketball Keys 78
Set Shot Time 78
Recall Shot Time 79
Time Out On/Off 79
Blank Player Foul 80
Period +1 80
Time Out 81
Score +1, +2, +3, -1 82
Team Fouls +1 83
Bonus 84

Possession 84
In Game/Out of Game 84
Delete Player 84
Player 85
Individual Substitution 87
Mass Substitution 88
7.1 Edit 89
Time Out 89
Score +1, +2, +3, -1 89
Team Fouls +1 90
Period +1 90
Time Out On/Off 90
7.2 Menu 91
New Game 91
New Code 91
Home Roster, Guest Roster 92
Display Menu 93
Edit Settings 95
Time of Day 95
7.3 Settings 96
Number of Periods 96
Main Clock 97
Shot Clock 98
Time Outs 99
Team Score 100
Team Fouls 101
Select Captions 101
Select Team Foul Display 102
Score by Quarter 102
Switch Output 102
Default Settings 104

Section 8: Football Operations 105

8.1 Football Keys 105
Time Out On/Off 105
Set Play Clock 106
Recall Last Down 108
Quarter +1 109
Yards To Go 109
Down +1 109
Ball On 110
First & 10 110
Time Out 110
Score +1, +2, +3, +6, -1 112
Possession 112
Yards Rushing 114
Yards Passing 115
First Downs +1 115
8.2 Edit 116
Time Out 116

Score +1, +2, +3, +6, -1 116
Quarter +1 117
Time Out On/Off 117
8.3 Menu 118
New Game 118
New Code 118
Home Roster, Guest Roster 119
Display Menu 121
Edit Settings 122
Time of Day 123
8.4 Settings 124
Main Clock 124
Play Clock 125
Time Outs 126
Center of Field Yard Line 127
Auto Calculate 127
Select Captions 128
Score by Quarter 128
Switch Output 128
Default Settings 130

Section 9: Hockey Operations 131

9.1 Shots on Goal Console Operation 131
9.2 Hockey Keys 131
Time Out On/Off 131
Enable Penalty Clocks 132
Disable Penalty Clocks 132
Minor/Major Penalty 132
Period +1 133
Penalty 133
Time Out 133
Player Penalty 135
Set Main Clock 136
Score, Shots on Goal and Saves 136
Clear All Penalties 137
Delete Penalty 137
9.3 Edit 137
Time Out 137
Score, Shots on Goal and Saves 138
Period +1 138
Time Out On/Off 139
9.4 Menu 139
New Game 139
New Code 140
Home Roster, Guest Roster 140
Display Menu 141
Edit Settings 143
Time of Day 143
9.5 Settings 144
Main Clock 144

Penalty Times....145
Time Outs....146
Select Captions....147
Switch Output....147
Default Settings....148

Section 10: Soccer Operations....149

10.1 Soccer Keys....150
Time Out On/Off....150
Half +1....151
Time Out....152
Score +1, -1....153
Other Increment and Decrement Keys....153
10.2 Edit....153
Half +1....153
Time Out On/Off....154
Time Out....154
Score +1, -1....155
Other Increment and Decrement Keys....155
10.3 Menu....155
New Game....156
New Code....156
Home Roster, Guest Roster....156
Display Menu....157
Settings....159
Time of Day....159
10.4 Settings....160
Main Clock....160
Corner Kicks, Saves, or Fouls....161
Time Outs....161
Display Penalty/TOL....163
Switch Output....163
Default Settings....164

Section 11: Tennis Operations....165

11.1 Tennis Keys....165
Serve....165
Matches Won +1....166
Games Won....166
Point....166
Advantage....166
Deuce....166
Tie Break....166
Reset Match....167
Reset Game Score....167
Match Number +1....167
Set +1....167
11.2 Edit....167
Games Won....168

Points 168
Set +1 168
Match Number +1 168
Matches Won 169
11.3 Menu 169
New Game 169
New Code 169
Home Roster, Guest Roster 170
Display Menu 171
Edit Settings 172
Time of Day 173
11.4 Settings 174
Main Clock 174
Switch Output 174
Default Settings 175

Section 12: Track Operations 177

12.1 Track Keys 178
Reset 178
Lane 178
Place 179
Home and Guest 1 Score 179
Guest 2 and Guest 3 Score (Event/Heat) 180
Score +1 181
12.2 Edit 181
Score +1 181
12.3 Menu 181
New Game 182
New Code 182
Home Roster, Guest Roster 182
Display Menu 183
Edit Settings 185
Time of Day 185
12.4 Settings 186
Guest 2 and Guest 3 key function 186
Switch Output 187
Default Settings 188

Section 13: Volleyball Operations 189

13.1 Volleyball Keys 190
Time Out On/Off 190
Time Out 190
Match Number +1, Games +1 191
Score +1, -1 192
Games Won +1 192
Aces, Kills, Blocks, and Digs 192
Serve 193
In Game/Out of Game 193
Delete Player 193

Player 194
Individual Substitution 196
Mass Substitution 197
13.2 Edit 198
Match Number +1, Games +1 198
Time Out 198
Score +1, -1 199
Games Won +1 199
Aces, Kills, Blocks, and Digs 199
Time Out On/Off 200
13.3 Menu 200
New Game 200
New Code 201
Home Roster, Guest Roster 201
Display Menu 203
Edit Settings 204
Time of Day 205
13.4 Settings 206
Main Clock 206
Time Outs 207
Team Stats 208
UPDATE PLAYER? 208
User Def 1 and User Def 2 208
Select Captions 210
Switch Output 211
Default Settings 212

Section 14: Wrestling Operations 213

14.1 Wrestling Keys 214
Match Number +1 214
Period +1 214
Set Main Clock (Period Times) 215
Home Advantage, Guest Advantage, Stop Advantage Clock 216
Team Score +1, -1 217
Match Score +1, +2, +3, -1 217
Start/Stop Injury Time 218
Reset Match 218
Start/Stop Blood Time 219
Start/Stop Recovery Time 220
14.2 Edit 220
Home Advantage, Guest Advantage 220
Guest Advantage 220
Blood Time 221
Injury Time 221
Match Number, Period, Team Score and Match Score 221
14.3 Menu 223
New Game 223
New Code 223
Home Roster, Guest Roster 224
Display Menu 225

Weight Class 226
Edit Settings 227
Time of Day 227
14.4 Settings 228
Main Clock 228
Blood/Injury Time 229
Weight Class 229
Select Captions 230
Display Lines for Weight Class 230
Display Team Score 230
Switch Output 231

Section 15: Event Counter 233

15.1 General Event Counter Information 233
15.2 Day and Time Event Countdown 233
Value/Days 234
15.3 Time Base Counter 234
Value/Days 234
Increment Value 235
Decrement Value 235
Time Interval 235
15.4 External Input Counter 236
Value/Days 236
Increment Value 236
Decrement Value 236
15.5 Menu 237
New Game 237
New Code 237
Dim/ Bright 238
Stop at Zero 238

Section 16: Karate Operations 239

16.1 Karate Keys 239
W (Wazaari) 239
H (Hansoku) 239
M (Mubobi) 240
J (Jogai) 240
Win 240
16.2 Edit 240
W,H,M,J 240
16.3 Menu 241
New Game 241
New Code 241
Display Menu 242
Edit Settings 243
Time of Day 244
16.4 Settings 245
Main Clock 245
Switch Output 245

Default Settings....246

Section 17: Tae Kwon Do Operations....247

17.1 Tae kwon do Keys....247
D....247
Gamjeom (G)....247
Kyong-go (K)....248
Win....248
√....248
Total On/Off....248
Weight Class....248
Round Length....249
Rest Length....249
Round Number....249
17.2 Menu....249
New Game....250
New Code....250
Reset Round....250
Reset Rest....251
Display Menu....251
Edit Settings....253
Time of Day....253
17.3 Edit....254
D,G,K....254
17.4 Settings....254
Auto/Manual Timing....254
Switch Output....254
Default Settings....255

Section 18: Judo Operations....257

18.1 Judo Competitor Status....257
18.2 Judo Keys....258
White and Blue Osaekomi....258
Set Osaekomi....258
Sono-Mama....259
Yoshi....259
Toketa....259
Clear....260
Win....260
Ippon....260
Medical Exam....261
Keikoku....261
Wazaari....262
Chui....262
Yuko....262
Shido....263
Koka....263
18.3 Edit....264
Yuko/Koka....264

18.4 Menu 264
New Game 264
New Code 265
Display Menu 265
Edit Settings 267
Time of Day 267
18.5 Settings 268
Main Clock 268
Wazaari Time 268
Ippon Time 268
Medical Time 269
Switch Output 269
Default Settings 270

Section 19: Boxing Operations 271

19.1 Boxing Keys 271
Set Round Time/Set Rest Time 271
Round Number 271
Maximum Round Number 272
Round Number +1 272
19.2 Menu 272
New Game 272
New Code 273
Dimming 273
Home Roster, Guest Roster 274
Display Menu 275
Auto Time 276
Time of Day 276
19.3 Edit 277

Section 20: Strikeout Count 279

20.1 Strikeout Keys 279
Season Strikeouts 279
Game Strikeouts 279
Strikeouts +1, -1 280
Display Control Keys 280
20.2 Menu 281
New Game 281
New Code 281
Dimming 282
20.3 Edit 282
Strikeouts +1, -1 282

Section 21: Cricket Operations 283

21.1 Cricket Keys 283
Batsman Left, Batsman Right 284
Runs +1, +4, +6 284
Runs -1 284

Extras +1 285
Extras -1 285
Wickets +1 285
Wickets -1 285
Overs +1 286
Overs -1 286
Inning #1, Inning #2 287
21.2 Edit 287
Runs +1, +2, +3, -1 287
Extras +1, -1 287
Wickets +1, -1 288
Overs +1, -1 288
21.3 Menu 288
New Game 288
New Code 289
Dimming 289
Home Roster, Guest Roster 290
Inning Settings Menu 290
Time of Day 291

Section 22: Water Polo Operations 293

22.1 Water Polo Keys 293
Time Out On/Off 293
Enable Penalty Clocks 294
Disable Penalty Clocks 294
Period +1 295
Time Out 295
Player Penalty Start 297
Set Main Clock 297
Score 298
Clear All Penalties 298
Delete Penalty 298
22.2 Edit 299
Time Out 299
Score 299
Period +1 300
Time Out On/Off 300
22.3 Menu 301
New Game 301
New Code 301
Home Roster, Guest Roster 302
Display Menu 303
Edit Settings 304
Time of Day 305
22.4 Settings 306
Main Clock 306
Shot Clock 307
Penalty Time 308
Time Outs 309
Switch Output 310

Default Settings 311

Appendix A: Reference Drawings 313

Appendix B: Sport Inserts 315

Appendix C: Sports Code Numbers 317

C.1 Indoor Model Numbers 317
C.2 Outdoor Model Numbers 321
C.3 Miscellaneous Model Numbers 324
C.4 Custom Indoor Facility 326
C.5 Custom Outdoor Facility 326

Appendix D: Quick Reference 327

All Sport 5000® Standard Keys 327
All Sport 5000® Segment Timer 328
All Sport 5000® Baseball 329
All Sport 5000® Basketball 331
All Sport 5000® Football 333
All Sport 5000® Hockey 335
All Sport 5000® Soccer 337
All Sport 5000® Track 339
All Sport 5000® Volleyball 341
All Sport 5000® Wrestling 343

Section 1: Introduction

This manual is designed to explain the operation of the All Sport® 5000 Series console. For questions regarding the safety, installation, operation or service of this system, please refer to the telephone numbers listed on the cover page of this manual. To fully understand this manual and the operation of the All Sport 5000 Series console; Daktronics recommends that all general sections be read in conjunction with specific sport(s).

Important Safeguards

1. Read and understand all instructions.

2. Do not drop the control console or allow it to get wet.

3. Do not let any power cord touch hot surfaces or hang over the edge of a table that would damage or cut the cord.

4. If an extension cord is necessary, a three-pronged, polarized cord should be used. Arrange the cord with care so that it will not be tripped over or pulled out.

5. Always turn off and/or unplug the control equipment when it is not in use. Never yank the power cord to pull the plug from the outlet. Grasp the plug and pull to disconnect.

6. To avoid electrical shock, do not disassemble the control equipment or the driver modules. Incorrect reassembly can cause electric shock and faulty operation or permanent damage to the circuits.

The box below is an illustration of Daktronics drawing numbering system. The drawing number "7087-P08A-69945" is how Daktronics identifies individual drawings. This number is located in the bottom right corner of the drawing. The manual will refer to drawings by the last five digits and the letter preceding them. In the example, the drawing would be referred to as **Drawing A-69945.** The drawings are located at the end of each section and in **Appendix A.**

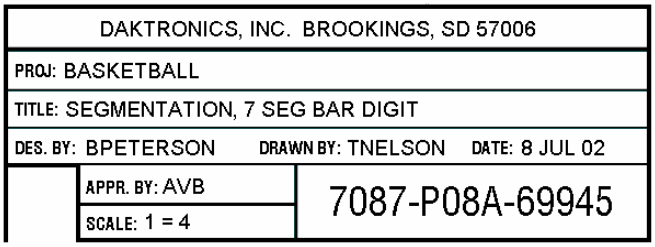

Figure1: Drawing number location

1.1 Console Overview

The All Sport® 5000 Series console is a state-of-the-art scoring and timing system. The console's liquid crystal display (LCD) will guide you through the operation of the system.

As a safety feature, this product has a 3-wire ground type plug equipped with a third (grounding) pin. This plug only fits into a grounding-type power outlet.

Note: If you are unable to insert the plug into the outlet, contact a qualified electrician to replace the obsolete outlet.

When opening the packages, inspect for shipping damage such as rattles and dents. See that all equipment is included as shown on the packing slip. Immediately report any deficiencies to Daktronics. Save all packing materials for shipping if warranty repair or exchange is needed.

1.2 Revision History

Version 1.0 Release Date: 3 January 2000

- Initial software release

Version 1.0.1 Release Date: 11 January 2000

- Fixed the clock =0 indicator (period end) so it will update when count up/down is changed
- Made the shot clock not blank when the clock is set to count up
- The time-of-day (TOD) clock only works with 60Hz, made so it will work with 50Hz power also. This includes having it count this in the tenths/hundredths field so the TOD will be in sync with the driver time
- The timeout ON/OFF key does not allow for a cold key exit once it is in edit of the time
- Increase the refresh rate of the drivers
- When set to TOD display, the TOD was not being sent out on RTD
- Modified the soccer and baseball settings function to check if it is called while in the game or before the game for certain settings that change what is displayed on the scoreboards
- Add code 0000 to do keyboard test and LCD test

- Add indication of console running from battery backup. Add message at console power up to indicate that AC power was not connected. Add message to LCD and sound beeper when AC power lost

- Make shot/play clock horn turn off with reset operation

- Make TOD in 24-hour format so it does not shift to mm:ss when hrs are zero

- Make the set TOD packet so it will still send when the same TOD is set in

Version 1.0.2 Release Date: 12 January 2000

- Added output tables for BB-2031_PLF and BB-2031_FPL, these tables were added to codes 1101 and 1102 and replaced the BB-3000 output on address 13

Version 1.0.3 Release Date: 21 January 2000

- Made change to RAM test in production test

- Added output tables for a BB-2031, these tables were added to codes 2101 and 2111 in volleyball and codes 3101 & 3102 in wrestling and replaced the BB-3000 output on address 13

Version 1.0.4 Release Date: 7 February 2000

- Revised wrestling advantage time to not start with clock start if the advantage clock was previously stopped

- Added flashing of player stats in basketball and volleyball

- Removed the delete players option in home and guest roster for basketball and volleyball

- Removed the edit settings question at power up

- Removed the new game question when the code entered is the same as the previous code that was used

- Changed menu so that arrow keys will wrap around back to the start of the menu items

- Moved the switch output selection to the end of the settings function

- Revised the player edit function in basketball and volleyball to exit the routine when **<ENTER>** is pressed

Version 1.0.5 Release Date: 7 March 2000

- Track sport added
- Test code 0001 added
- Set TOD to 12:00 when start up so operators will set new time
- Added caption control to basketball, volleyball, football, wrestling, and hockey
- Added codes for the 2500 series basketball boards
- Added previous game scores to volleyball for display on the 2500 series basketball board
- Added player-fouls-points (PLY FL PTS) captions for the 3000 and 2500 series basketball boards. The captions will be added to basketball, hockey, volleyball, wrestling, and football (arena)
- Changed player rosters to not allow duplicate numbers to be entered
- Changed individual substitution and mass substitution to allow add of player number to roster if not found
- Changed the LCD in basketball to display the shot time
- Added team fouls –1 function in basketball
- Removed the no AC power warning message at power up
- Added flashing of player number in basketball and volleyball

Version 1.0.6 Release Date: 17 March 2000

- Added segment timer program
- Added lacrosse code
- Changed menu in each sport to include "display menu" subroutine

Version 1.1.0 Release Date: 2 May 2000

- Added pitch and speed code 5500 for Jugs and Stalker guns
- Added tennis code 220 for standard tennis board
- Added a scoreboard blank feature to the display menu
- Added blank capability to the remainder of scoreboard digits in the TOD menu for outdoor applications

- The time out timer is blanked and the RTD sent when the timer is stopped
- Formatted the specific TOD RTD item numbers as hh:mm:ss
- Add PLR F PTS captions team name message center (TNMC) for the BB-3000 series scoreboard
- Made the captions 1 and 2 control work on the sports of basketball, hockey, volleyball, wrestling, and football on column 3 of address 220
- Added auto increment to period when the period time set is used and the clock value was at 0:00
- Added auto increment of inning to baseball and the ability to turn the auto increment on/off
- When the inning is incremented it also sets the current team score to 0 if blank and changes the at bat indicator

Version 1.1.1 Release Date: 10 May 2000

- Corrected error in BB-2041 driver 2 driver table in basketball player-foul-points, points x10 column 7. This error will only be found in release 1.1.0
- Added scoreboard test program, code 0002

Version 1.2.0 Release Date: 01 August 2000

- Added event counter codes 371-376
- Added judo codes 281 and 284
- Added karate codes 282 and 285
- Added tae kwon do codes 283 and 286
- Added multi-purpose timer code 100
- Added dedicated segment timer code 99
- Added auto racing codes 301, 333, 336, 401, 433, 995
- Added a configurable warning time to segment timer program
- Added clock console codes in basketball (1000) and football (6000)
- Added shots-on-goal console code in hockey (4000)

- Fixed “ball on” function to exit when a key was pressed after an illegal key value
- Fixed problem with hockey shots-on-goal and home player 1 penalty number
- Fixed dimming problem causing scoreboard to blank when dim level was changed
- Added momentary relay closure setting for analog clock operation in soccer codes
- Added a RTD heartbeat clock packet, changed routine to update clock RTD once per second when counting down
- Modified routines to accept a clear key press and blank scoreboard data
- Modified blank shot setting routine to update shot clock when setting was changed
- Fixed basketball initialize routine to copy shot clock default on a new game and not on a resume
- Added a second configurable timer reset switch in basketball and football
- Modified set play clock and set shot clock functions to start over at the first step when a new key was pressed
- Added H-413 shots-on-goal scoreboard to all hockey codes
- Modified roster functions to send only changed RTD item fields
- Added codes 1401 and 1402 to basketball program and codes 2401, 2402 to volleyball
- Modified initialize routine to leave the TOD clock at its preset value when a new game is selected

Version 1.2.1 Release Date: 30 August 2000

- Corrected team name centering problem with odd length team names being off by one column
- Changed the multi purpose timer default dimming level to 0 (full brightness)
- Shifted characters r and y were reduced to 3 columns for TNMCs
- Added a manual horn button function to test code 0001

Version 1.3.0 Release Date: 24 October 2000

- Modified multi-purpose timer to have TOD display on a 6 digit clock output
- Changed initialize in basketball so heartbeat packet will be sent

- Modified pitch and speed routines to accept a faster pitch speed within 2 seconds of first reading

- Modified auto racing code to use driver name from ChronX for RTD display purposes

- Made several changes to RTD output table

- Modified sport menus to have the display dim selection in the main menu after New Code

Version 1.3.1 Release Date: 10 January 2001

- Changed auto racing to ignore any commas in alpha fields (field separators)

- Add power-on caption control to address 23,24,25 in football to column 16 of each for code 6611

- Change auto racing to default to show current lap in manual codes

- Change auto racing to display lap in race mode and display lap time in qualify mode

- Change test code to fix the problem of manual horn key causing the rotating column and row to stop

- Add output for TI-218 in basketball at address 2

- Fix wrestling adv time problem of switching adv indicator when adv time reaches the main clock period time setting

- Modify wrestling scoreboard test to display red and green on LCD instead of home and guest

- Fix wrestling new game problem of not turning off the adv time clock so when the main clock is started, the adv time starts counting down

- Correct the problem of the period end time not being saved on a loss of power and then resume game

Version 1.4.0 Release Date: 2 February 2001

- Fixed the scoreboard test program for auto racing boards to not blank the clock section

- Added a scoreboard test function for MS-2001 when code 02 is entered without a previous sport code

- Added a new code 6402 for football on hockey 2024 boards

- Changed auto racing pylon scoreboard outputs for pos 41-45 to use the correct RTD item numbers and display the correct information

Version 1.4.1 Release Date: 1 March 2001

- Add outputs for a new MS-2009 to soccer and to football

- Add basketball and hockey codes for use at the American Airlines Center in Dallas codes 9101 (basketball) and 9401 (hockey)

- Add outputs for SO-2008 to soccer (Code 7601) and football (code 6601) and hockey/lacrosse (code 4601)

- Add x100 team score segments to hockey boards with address 71 to basketball codes 1401 and 1402 and to hockey codes 4401 and 4402 for testing purpose

Version 1.4.2 Release Date: 12 April 2001

- Added a menu option to baseball to allow a 2 digit time or at bat to be displayed in the at bat section of the output. This is done for a new model of scoreboard BA-2005

- Added a minimum speed selection for radar gun on pitch and speed

- Corrected problem with speed of pitch not working with Stalker® radar gun when gun is set for whole digit and no tenths

- Added a medical timer so it will count beyond the end of a period

- Fixed judo osaekomi timer so it will count beyond the end of a period

- Added address 22 for 6 digit time on the TI-2006 to the multi-purpose timer

- Added an output for SO-1830, 1930 to code 4601 hockey/lacrosse for use in lacrosse that will show period on the home penalty digit

Version 1.4.3 Release Date: 8 June 2001

- Added a new address 17 for Tuff Sport™ basketball boards to codes for basketball, volleyball, wrestling, hockey, and football

- Added 16 column caption on address 223 for Kemper Arena to codes 1103, 2103, 3103, 4103 and 6103

- Fixed the judo medical timer so if set to time of 0:00 would disable the medical timer when the medical exam key is pressed

- Added to judo to show the score, penalty, and medical status on the second line of the LCD

- Added pitch count keys to pitch and speed code

Version 1.4.4 Release Date: 26 July 2001

- Added alternative driver tables for reverse of white-blue to judo, karate, tae kwon do, at driver address 109,110,111

- Change radio channel limit to 75 channels

- Added address 15,16 to football code 6611

- Added the select frame # response to DSTI (to indicate sport) for hockey, soccer, baseball, and wrestling

Version 1.5.0 Release Date: 26 October 2001

- Made hockey penalty times to shift up to the top position on the scoreboard

- Changed to allow adjustment of penalty times after setting the main clock

- Added SO-1624 address 13,14 to hockey code 4601

- Add team name address 221 to code 8604 for track

- Moved the at bat for baseball on FB-1630/SO-1830 from 5,6 to 3,4

- Changed segment timer so it can count up

- Changed the displays for American Airlines to show full timeouts on the main scoreboard and full-partial timeouts on the auxiliary displays

- Changed the main hockey console so it would keep the SOG keys active after data is received from the SOG console

- Added a second H-segment for colons on penalty time to the sec 1 digit, in hockey for FP-25 displays

- Changed the DSTI interface so it would not send back data it received but only update the scoreboards

- Added boxing code 291 for BB-3000 scoreboards

- Added the driver data for a BA-2010 to the BA-5 driver at address 61

- Added the driver data for FB-2005 to FB-8 driver at address 11

- Added 32 column captions for BB-3000 boards for TMFLS/TOL at address 225

- Changed delete of penalty time in hockey so it will scroll penalty time 2 up instead of bringing in time from penalty time 3

Version 1.5.1 Release Date: 27 December 2001

- Fixed the timeout indicators so they will clear when the main clock is started

- Changed the timeout function so it will turn on the indicator but not the timeout time when the configured time is set to zero

- Fixed the track code running time output address 22 so the colon will light when the colon is on in the RTD data

- Added address 2 to all auto racing codes for LC230 and LC218 displays (except lane timer 303)

- Default segment timer for 5 minutes

Version 1.5.2 Release Date: 6 March 2002

- Added shot clock timing to hockey/lacrosse

- Added pen/fouls display selection in addition to SOG and saves in soccer

- Added code 4499 for paint ball that uses hockey insert but has 3 penalty times that count

- In basketball, added team fouls display on line 6 of player fouls stats and made its display configurable

- Added a fixed width font conversion for auto racing in a new code (334)

- Added code 5099 for the strikeout count controller

Version 1.5.3 Release Date: 10 April 2002

- Made rodeo timer able to edit now up time in timed events mode without adjusting each of the individual timers

- Corrected ½ point scoring setting in rodeo at power up, setting was opposite of what it said

- Change the scoreboard ON/OFF key function in rodeo so the scoreboard automatically turns back on at the start of the next competitor or at reset

- Added arena football code 9601 to American Airlines

- Added full and partial timeouts to BB-2046
- Switched SOG and SAVES position on the BB-2046 as requested (by scoreboard design)
- Resume game does not restore TOD clock correctly in hockey. Made all sports go to game clock on a new game or resume
- Added code 555 for Compulink interface for drag racing displays

Version 1.5.4 Release Date: 2 May 2002

- Made the player number entry for fouls and points (in basketball) skip past the timer delay if a key is pressed before it expires
- Adjust the dimming levels to add dim levels of 1-9
- Added codes for Resch Center
- Add new promo keys for the strikeout console used at Shea Stadium
- Added code 5599 for the sport of cricket
- Added sending of code number, model, and version number for TrueTime support. It was added to the multidrop and RTD outputs
- Made boxing not count a time of 0 in the interval time. An interval time of 0 is treated as if there were no automatic timing and stops at the next round
- Added codes for SUNY at Cortland 9403, 9603, 9703
- Added hustle board stats to basketball codes 1103, 1104, 1105. This is on address 35 and includes rebounds, blocks, assists, steals
- Added code 7611 to soccer for 4 column/digit clocks

Version 1.5.5 Release Date: 23 October 2002

- Made football code 6103 blank the total yards if rushing and passing yards are blank
- Added a segment for power-on/sponsor panel in basketball on address 35 segment 11-H and to address 17 segment 15-H
- Fixed the lock-up problem in receive of stats in basketball and hockey
- Made baseball so it could shift inning scores by 9
- Made wrestling show team score and match score based on the last score accessed

- Added general stats to football for address 28 in code 6611 for the Fargodome
- Changed the default mode to race mode in auto racing
- Made codes 6000 and 1000 update the time on the display after doing a set time
- Added code 4701 and made it identical to code 4601. Made code 4601 to work for football boards
- Added code 4602 and 4702 to have 3 penalty timers counting for lacrosse
- Fixed the problem with mass-sub in volleyball
- Added down labels 1st, 2nd, 3rd, 4th to football
- Fixed the problem of team fouls that are displayed on the 6th line of a stats panel being blanked by player stats functions
- Changed the SO-2031 soccer output to show fouls instead of penalties
- Modified scoreboards output so the driver packets are made before sending to lighten the load on interrupt overhead. Also made it so it only sends the data up to the point where the driver data has not changed

Version 1.5.8 Release Date: 03 December 2002

- Corrected a problem that caused the broadcast blank data not to be sent on power up
- Corrected a problem with the team name message centers being sent the wrong amount of data on a refresh packet
- Corrected the problem with test code 0001, blank display, and scoreboard address test so they are all now working correctly

Version 2.0.0 Release Date: 15 January 2003

- Added Water Polo code 4498
- Added address 17 to hockey codes 4401,4402 and to basketball codes 1401,1402
- Added scores by quarter for basketball
- Added scores by quarter for football
- Made rushing and passing yards work with negative numbers
- Fixed the receive of MDP from clock console in football and hockey
- Removed period key from boxing
- Made colon for adv time in wrestling test code blank

- Added shot clock test to water polo and hockey
- Made increment of period in set time so it would blank the quarter score if scoring by quarter
- Added time-outs-left (TOL) to column 15 of the rushing/passing stats boards in football
- Added segment E (col 8) to the colon of address 22 for the multi-purpose timer
- Added broadcast group and channel selection for the Gen IV radios

Version 2.0.1 Release Date: 12 May 2003

- Added checks in the verify configuration that checks to see that all clock precision settings are valid
- Added address 17 to 6402 for arena football
- Added address 17 to code 220 for tennis
- Added a wrestling code to the custom codes for the Resch Center
- Added 2 digit time to address 61 (columns 12,13) in code 5501 for baseball for the model BA-2012
- Fixed the radio channel select to work for Gen IV radios after exit from the production test
- Changed receive of DakStats® information so there is not a scoreboard update done unless the information has changed from previous data
- Added address 223 for ply/fl/pts to 4401 and 4402 and also to volleyball
- Fixed the shot clock when not set for blanking so it will count down when shot time is less than the game time
- Added code 221 for tennis models TN-2010 and TN-2011

Version 2.0.2 Release Date: 29 May 2003

- Added period/quarter/game caption to custom codes 9102, 9202, 9302, 9402, 9602
- Added an option to rodeo code 8000 in scored events to have the horn still sound after the horn time period after the timer has been stopped
- Added a football mode to the MS-2009 and MS-2118 on address 71,72,73

Version 2.0.5 Release Date: 25 August 2003

- Added code 556 for C33 interface

- Added code 399 for rowing controller
- Added weight class with H/G points for win on player foul stat panels to wrestling
- Added code 8610 for 8-lane track timing
- Added configuration to soccer for display of TOL or penalty
- Changed hockey so penalty does not turn off opposite penalty
- Added a second segment for colon on penalty time to address 29, 30, 31, 32 in code 4104
- Added address 11 to codes 9105, 9405, 9205
- Changed auto racing to fix lockup problem when odd numbered start position is set in variable position pylon

Version 2.0.6 Release Date: 20 November 2003

- Changed segment timer so it sends the segment number out on RTD output
- Fixed wrestling code 3304 so the segment number will show on match score
- Added captions for PERIOD/QUARTER/GAME to codes 9105,9405,9205, & 9605
- Added advantage time to foul/points on address 14 for code 3102
- Added the ability to show at bat/time on the AT BAT digits on a BA-3718
- Added address 71 to code 7711 for soccer
- Set football default to auto horn off
- Fixed auto racing codes so the scoreboard does not stop updating

Version 2.0.7 Release Date: 30 March 2004

- Added a mode for baseball on the SO-2008
- Added team name captions for MS-2009
- Fixed the test code for soccer so it will test the penalty/TOL section
- Added flashing of a player fouls and points when they are received from the DSTI
- Added generic stats for basketball so DSTI can display three points shots
- If the weight classes are turned off in wrestling, made the stat panels go blank

- Fixed team fouls on stats panels for line 6, guest side did not show on power up or resume game
- Added a key to basketball to clear team fouls
- Added the period text messages and period descriptions
- Added team name captions for FB-2002 for football, soccer, and lacrosse
- Added speed-of-pitch indicators for mild, medium, and hot levels
- Added circle K indicators to speed-of-pitch and also to promo display codes
- Added match elapsed time to wrestling, and show it and time of day on reset of a match
- Added a code to basketball (code 1301) to run the WR-2024 board
- Added a code to volleyball (code 2301) to run the WR-2024 board
- Added a code to gymnastics (code 0015) to run on the WR-2024 board
- Added a segment timer for home/guest partial team fouls on relay driver at address 220
- Added a code (4102) for handball/lacrosse for counting three penalty times on basketball boards
- Fixed RTD text field for Guest Penalty from Possess to Penalty

Version 2.0.8 Release Date: 16 August 2004

- Added address 14 to hockey codes for hockey boards and basketball codes for hockey boards
- Added a two second delay after stop of the blood/injury time before it goes back to match time
- Added a new code(6612) for four col/digit on football
- Added a new address for football (Address 18) for the FB-2007
- Made a new code (code 7702) for soccer to count over 99 minutes for European market
- Fixed basketball receive of generic stats from DSTI
- Added partial time-outs display segments on address 23 and 25 in basketball
- Fixed code 300 so the lap time shows on the old CH14-xx displays

- Added custom code 9606 for the San Francisco 49ers football board
- Added code 9100 for BB-2139 basketball board with 12 electronic player name captions
- Added period digit to soccer for a new SO-2013 board to address 14 (uses addresses 13 and 14) and also to hockey/lacrosse address 14
- Added power-on caption segments to the BB stats addresses 36 and 37
- Added save of baseball/basketball RTD to GIP when exit of stats mode is done. This allows for recovery of current game data if stats feed is lost

Version 2.0.9 Release Date: 25 October 2004

- Added captions for H/G WEIGHT to wrestling and set correct captions for codes 3101 to 3105
- Fixed the clear stats function in volleyball so it updates after the clear and does not take players out of the game
- Changed the score of +1, +3, +6 in football so that it will blank ball on, down, to go
- Added team name abbreviations (address 222) for the main sports
- Fixed electronic team name captions for USD by adding a code for basketball, football, and volleyball that supported an outdoor controller that shifts left to right
- Fixed the tennis team name captions top and bottom so the length can be set
- Added custom code (9108) for Brigham Young University for a retrofit of their old board

Version 2.1.0 Release Date: 02 February 2005

- Added a code for running wrestling on a hockey and basketball board combo, (H-2104, BB-2124) with the codes 3401 and 3402
- Added a code for field hockey that would do 3 penalty timers for H-2104, on code 4603,4703
- Corrected the message in baseball menu from error position on-off, to position
- Added a period text description code for two console operation in basketball and football
- Added two new driver addresses with three penalty timers in water polo
- Fixed problem in wrestling with Reset Match key, any cold key would lock it up for several key strokes
- Changed to add the weight class scores to get the total team score for the meet, if using weight classes

- Added player names to volleyball and penalty times to hockey/handball for the European board codes 9200 and 9400. Added code 9409 for handball with three penalty times

- Added display codes D7 and D8 to the compulink interface (code 555) for left and right KPH

Version 2.1.1 Release Date: 10 March 2005

- Added a code for running wrestling on a hockey and basketball board combo, (H-2104, BB-2124) with the codes 3401 and 3402

- Added error x10 digits for home and guest to baseball on address 68 and 69

- Changed water polo so the horn command bit will be sent with the shot clock horn

- Added address 23,24,25,26 to codes 1401, 4401, 3401, 2401 and 6402

- Added extra addresses to volleyball, football, and soccer for All Sport CG

Version 2.1.2 Release Date: 15 May 2005

- Added PLY/FL/PTS captions (addr 223) to the codes 9100,9200 of basketball and volleyball

- Added quarter score outputs for football to address 29 of code 6611

- Fixed 8-lane track output to show lane # on address 12, it had the wrong rtd item #

- Added a time into period for hockey to be shown when the stop key is pressed and when arrow keys are pressed

Version 2.1.7 Release Date: 24 March 2006

- Added a warning time horn for a partial timeout using the full timeout warning time

- Made a menu option to select if the team score is shown on team score/adv time section of the matside board

- Added new address to baseball for a 2 driver inning board, model BA-2022

- Changed the Mass Sub function in basketball so that it will not exit if you answer NO to the question of add player

- Fixed the Wrestling advantage time edit so if the advantage time is set to 0:00 for one team and then started for the other team it will count correctly

- Added custom code 0091 to replace an existing 2400 time of day console

- Added support for receive of DSTI data in Hockey code

- Changed baseball code to clear ball, strike, outs at top and bottom of inning, and clear of batter and average
- Added a key to clear the batter number and batter average
- Changed entering of average in baseball, so the value is padded with leading 0's
- Added recovery time keys to wrestling
- Changed wrestling so the blood/injury times remain on the display until a key is pressed

Version 2.1.8 Release Date 26 May 2006

- Added address for FB-2007 to soccer , football and baseball
- Fixed speed pitch so the stalker sport gun will work
- Added a team name caption for PERIOD/HALF to soccer codes, for Atlanta.
- Fixed problem with team name edit in tennis for the second name
- Made baseball auto increment of innings update the period text as well
- Made the outs +1 key clear ball, strike, batter and average when it switches sides

Version 2.1.9 Release Date 09 August 2006

- Fixed a problem with some consoles that will not run test code 0000 in production
- 2. Added address 24 and 25 to code 6604 and 7604
- 3. Added possession indicators (full col) to address 16 in football codes

Version 2.2.0 Release Date 08 January 2007

- Changed code 9101 to make the dash on full and partial timeouts to always be on
- Also added team abbrev to the code, address 222
- Added a code 9111 for Georgia Dome
- Added a QUARTER caption for football in code 6601, to match the HALF caption in soccer
- Added a countdown timer code 370 that has an output with days and time (with tenths of sec)

- Added captions for baseball codes 5601 and 5602 to match the captions in football and soccer on address 226

- Added a separate warning time for the partial time outs in basketball

- Fixed the advantage time in wrestling to update the home and guest advantage areas after an edit. Also fixed the adv time when it was edited to blank or zero so it would count right, it was counting almost 2 sec before it went to 1

Version 2.2.1 Release Date: 23 May 2007

- Changed the way speed pitch data is read. There was a problem if radar guns were switched that the next speed would be missed

- Fixed the half TNMC caption in soccer codes, it was not correctly positioned

- Added address 19 for the new FB-2018 and SO-2018 boards to football, soccer, hockey, baseball, and track

- Added pitch count output to address 3 and to H/E digits on address 64, 65, 67

Version 2.2.2 Release Date: 21 June 2007

- Fixed the scoreboard test for baseball HE digits after pitch count was added to these digits in the last version

- Added custom codes for Madison Square Garden 9112, 9412, 9901

- Added a selection for showing laps-to-go in the autorace code 333

- Added an output (addr 10) for 6 digit time displays in autoracing

- Added an alt_seg_rtd to football, basketball, and hockey, for the segment # to show on shot/play clock digits

- Changed the autorace function getDatCarNum to set the car # blank if it gets a space or something other than a number

Version 2.2.3 Release Date: 23 Aug 2007

- Fixed so the code, model, and version number are sent when a new code or resume code is done.

- Fixed wrestling weight classes in position 1 and 2 to display correctly when set for a 5 line display and when selected for showing lines 13 and 14.

- Added code for Australian football and cricket. Code 6699-FB and 5699-CR.

- Fixed a bug in edit of quarter scores in football and basketball. Locks up if a cold key is pressed when waiting for quarter # entry.

- Changed baseball to show time/atbat/pitch on time digits and show HE/atbat/pitch on the HE digits.

- Added TSI interface code 558 to drag race timing codes.

Section 2: Basic Operation

2.1 Console Operation

The console face consists of a 2-line x 16-character liquid crystal display (LED), sport specific insert, numeric keypad, operation keys, main clock keys, and LEDs for status. In most cases, the top line of the LCD shows the main clock time, direction the clock is counting, and when the main horn is sounding. Generally, the bottom line of the LCD shows the HOME and GUEST team scores.

Throughout the manual the names or letters of *keys* on the keyboard are enclosed in arrows (such as **<ENTER>**). The standard fixed keys and functions on the right side of the console are explained in **Section 2.6**. All of the keys that pertain to a specific sport code insert are explained in detail in the section of the manual for that specific sport.

In addition, Quick References and Menu Flowcharts for the Standard Keys and many of the individual sports are provided in **Appendix D**.

2.2 Sport Inserts

Sports inserts are used to allow a single console to control multiple sports. Select the proper insert from the chart below and slide it into the insert opening on the left side of the console until it stops. To remove a sport insert, pull on the tab that extends from the left side of the console. The insert will easily slide out.

If an insert is lost or damaged, a copy of the insert drawing, located at the end of each section, can be used until a replacement can be ordered.

Use the labels provided in **Appendix B** to attach the correct code number to each sport insert. Write the code number in the following table and in the space provided in the section of this manual for that sport.

If you do not know the code number for your scoreboard, refer to **Appendix B** in this manual. If you do not know the model number of your scoreboard, refer to the **Installation and Maintenance** manual provided with the scoreboard.

Sport	Insert Number	Number Code
Baseball	LL-2438	
Basketball	LL-2433	
Boxing	0G-96892	
Cricket	0G-164973	
Event Counter	0G-58047	
Football	LL-2437	
Hockey	LL-2436	

(Continued on next page)

(Continued form previous page)

Sport	Insert Number	Number Code
Judo	0G-96891, 0G-98376	
Karate	0G-96890, 0G-98374	
Pitch and Speed	LL-2482	
Segment Timer	LL-2475	Not applicable
Soccer	LL-2440	
Strikeout	0G-163409	
Tae kwon do	0G-96889, 0G-98375	
Tennis	LL-2483	
Track	LL-2439	
Team Name (TNMC)	LL-2441	
Volleyball	LL-2434	
Water Polo	0G-178439	
Wrestling	LL-2435	

2.3 Sport Insert Operation Concepts

A sport insert identifies the actions keys required in the normal course of operation for that specific sport. In most cases, pressing a key immediately changes the scoreboard. Sometimes a sequence of keys must be pressed before a change is noticed on the scoreboard. Keys that require entry of additional information are marked by a dot. This additional information usually is a number followed by the **<ENTER>** key.

Keys with arrows activate an indicator (possession, bonus, etc.) on the scoreboard. The direction of the arrow selects the appropriate team (home or guest).

Some keys have a **+1, +2 or +3**. By pressing one of these keys once, the corresponding field on the scoreboard (such as team score or period) increments (increases) by the amount printed on the key. A key with a **-1** decrements (decreases) by one and a key with a **+1** increments (increases) by one.

On most inserts, certain keys have been grouped together under the heading **Home** or **Guest**. These keys are **team** keys and work the same for both teams. They affect the statistics for that one team. Keys not under one of these headings are **game** keys. They are general keys for the progress of the game (such as period or quarter). Other keys have been blocked together to emphasize that these keys work together.

2.4 Start Up

When the LCD Display is as shown, the following actions may be selected.

LCD Display	Action
AS-5000 V1.0.0 ED-XXXXX	The console performs a self-test when it is powered on. During the self-test, a message displays the version of the standard software loaded in the console. V = version number and revision number ED = standard software number
PREV CODE NNNN RESUME GAME?	When the self-test completes, a prompt displays the code number for the last game played. This is useful when power to the console is lost during a game. Press **<YES>** to resume the last game stored in memory. The console is now ready for game operation. Press **<NO>** to start a new game or change to a different sport. The console will prompt for a new code number as shown below.
NNNN = last code selected	
SELECT CODE CODE NNNN	The SELECT CODE prompt allows you to accept the last code selected (displayed on the second line) or enter a new code. To accept the code shown press **<ENTER>**. To select a new sport code: **1.** Get the code number from the sport insert or the section of the manual for that sport. **2.** Use the number keys to enter the new four-digit code. Press **<ENTER>**.
NNNN = last code selected	

(Continued on next page)

(Continued from previous page)

LCD Display	Action
RADIO CHAN NN ENTER OR CHANGE NN = last radio channel used	If a new code is selected, and the radio option is installed, the console prompts for a channel. When Resume Game is used the last channel selected is used. Press **<ENTER>** to accept the channel number or enter a new channel number. Refer to **Section 2.5** for more information.

2.5 Setting Radio Channels

Reference Drawings:

Channel Selection; Single Control Console, Gen IV ..... **Drawing A-180566**
Channel Selection; Single Broadcast Group; Gen IV..... **Drawing A-180922**
Channel Selection; Multiple Broadcast Group, Gen IV ..... **Drawing A-180923**

The radio receiver units used in the scoreboards have a channel-setting switch that can be set from 1 through 8 (channels 0, and 9-15 are not used). A radio receiver will accept data from a console transmitter with the same channel (and broadcast group) setting. The drawings, listed above show how to install the All Sport 1600 in order to operate one scoreboard or multiple scoreboards at a time.

The receivers also have a jumper that can be used to select broadcast group 1, 2, 3 or 4. A "Broadcast Group" defines a group of radio receivers that in addition to "listening" to the channel selected on the channel switch will also "listen" for data broadcast on their broadcast channel. There are four broadcast groups available.

In this type of system, the receiver unit at the scoreboard must have the channel switch set to a specific channel. The operator must know which channel the board is set on. The operator must then enter the specific channel during console startup when prompted to do so.

Each radio receiver will accept data sent from the broadcast channel of its respective broadcast group. This is selected by setting the transmitter radio (from the console) to the respective broadcast group (either 1, 2, 3 or 4). Every radio receiver will also accept data sent from the "Master Broadcast" channel. This is selected when a transmitter (console) radio is set to Broadcast Group 0 (BCAST 0) and Channel 0.

The channel number and broadcast group set on the radio installed in each scoreboard can be verified by cycling power to the scoreboard. Approximately seven seconds after power up, the scoreboard will show the current channel in the scoreboard clock digits. A CXX will first be shown where XX is the current radio channel number. This will be followed by BXCY where X is the current broadcast group and Y is the current channel number within this broadcast group.

There are three different radio scenarios that can be accommodated.

1. **Single Controller System:**
   In a single controller system, all radio receivers and all scoreboards receive signal from the same All Sport console at all times. The default channel and broadcast group settings on the receiver are not typically modified. An example of this type of system is a typical high school football installation.

2. **Multiple Controller System w/Single Broadcast Group:**
   In a multiple controller system with a single broadcast group, there are additional All Sport Controllers for controlling multiple scoreboards. There is never a scenario where groups of scoreboards that were run by individual controllers need to be run by a single controller. An example of this type of system is a softball complex with multiple fields and a scoreboard on each field.

3. **Multiple Controller w/Multiple Broadcast Groups:**
   In a Multiple controller with Multiple Broadcast (Split Court Operation) system, there are additional All Sport Controllers that can control multiple scoreboards. The broadcast group jumper is used to select broadcast group 1, 2, 3, or 4. By changing All Sport settings to a Broadcast address, a single All Sport Controller can control all scoreboards or specific groups of scoreboards (defined by the broadcast group). One example of this scenario is split court operation in basketball installations, where scoreboards are used to score multiple games at once, but can be grouped together to show one game if necessary. Refer to the drawings listed on the previous page for more information.

The All Sport Console will automatically detect when a radio transmitter is installed and will prompt the user for transmitter settings.

The All Sport Console will show the current transmitter radio status on the LCD when a code is entered. The following table describes broadcast group and channel settings.

LCD Display	Action
RADIO SETTINGS BCAST Y CHAN XX The LCD will toggle these screens	The LCD shows the current radio settings along with a prompt to accept or modify these values. If the radio settings are correct press <**ENTER**> If these values are incorrect press <**CLEAR**> If <**CLEAR**> is pressed to modify the radio settings the LCD at the left is shown, allowing edit of the Channel or Broadcast group setting.

(Continued on next page)

(Continued from previous page)

<table>
<tr><th>LCD Display</th><th>Action</th></tr>
<tr><td>ENTER TO ACCEPT
CLEAR TO MODIFY

The bottom line shows the current setting

BCAST GROUP 1
RADIO CHAN 01

The default setting is
Broadcast 1
Channel 1</td><td>Edit the Broadcast Setting. Use the number keys to enter the desired broadcast group and press <ENTER> to accept.

The asterisk will move to the channel setting. Use the number keys to edit this value and press <ENTER> to accept. Edit the channel number to the desired value and press <ENTER> to accept.

<table>
<tr><th>Broadcast Group</th><th>Channel Setting</th><th>Control Scoreboards</th></tr>
<tr><td>0</td><td>0</td><td>All Scoreboards</td></tr>
<tr><td rowspan="2">1</td><td>0</td><td>All in BCAST Group 1</td></tr>
<tr><td>1-8</td><td>Set to corresponding BCAST 1 Channel</td></tr>
<tr><td rowspan="2">2</td><td>0</td><td>All in BCAST Group 2</td></tr>
<tr><td>1-4</td><td>Set to Corresponding BCAST 2 Channel</td></tr>
<tr><td rowspan="2">3</td><td>0</td><td>All in BCAST Group 3</td></tr>
<tr><td>1-8</td><td>Set to corresponding BCAST 3 Channel</td></tr>
<tr><td rowspan="2">4</td><td>0</td><td>All in BCAST Group 4</td></tr>
<tr><td>1-4</td><td>Set to corresponding BCAST 4 Channel</td></tr>
</table>
</td></tr>
</table>

Single Controller Systems Channel Setting
Typically all single controller systems will use the default setting BCAST = 1, CHAN = 1. All radio receivers must be set with a switch setting of 1 with the Broadcast 1 (BCAST 1) jumper set.

If you suspect interference from a nearby Daktronics system, press **<CLEAR>** at the "**RADIO SETTINGS**" prompt to change the channel number.

Typically all multiple controller systems will use channel 1 for the first controller. All other controllers will use sequential channel settings (2-8). The following table describes broadcast channel and channel settings.

LCD Display	Action
RADIO SETTINGS BCAST Y CHAN XX The LCD will toggle these screens.	The LCD shows the current radio settings along with a prompt to accept or modify these values. If the radio settings are correct press <**ENTER**> If these values are incorrect press <**CLEAR**>
BCAST GROUP 1 RADIO CHAN 01	If <**CLEAR>** is pressed to modify the radio settings the LCD at the left is shown, allowing edit of the channel or broadcast group setting. Edit the broadcast setting. Use the number keys to enter the desired broadcast group and press <**ENTER**> to accept.
ENTER TO ACCEPT CLEAR TO MODIFY The bottom line shows default settings.	**Broadcast Group Setting** 1 Use this setting for all single controller systems the asterisk will move to the channel setting. Use the number keys to edit this value and press <**ENTER**> to accept. Edit the channel number to the desired value and press <**ENTER**> to accept. **Channel Setting** 1-8 Channels that may be used with broadcast channel 1. The channel switch on the receiver must match this value and only the Broadcast 1 (BCAST1) jumper must be installed.

Multiple Controller w/Single Broadcast Group Channel Setting
Typically all single controller systems will use Broadcast 1 and Channel 1 for the first controller and Channels 2-8 for all remaining controllers. All radio receivers must be set with a switch setting corresponding to the console controlling the scoreboard and a Broadcast 1 (BCAST 1) jumper set.

If you suspect interference from a nearby Daktronics system, press **<CLEAR>** at the "**RADIO SETTINGS**" prompt to change the channel number.

Typically all multiple controller systems will use channel 1 for the first controller. All other controllers will use sequential channel settings (2-8). The following table describes broadcast group and channel settings.

LCD Display	Action
RADIO SETTINGS BCAST Y CHAN XX	The LCD shows the current radio settings along with a prompt to accept or modify these values. If the radio settings are correct press <**ENTER**>. If these values are incorrect press <**CLEAR**> If <**CLEAR**> is pressed to modify the radio settings the LCD at the left is shown, allowing edit of the channel or broadcast group setting. To edit the broadcast setting, use the number keys to enter the desired broadcast group and press <**ENTER**> to accept. **Broadcast Group Setting** 1- Use this setting for all multiple controller with single broadcast group setups. The asterisk will move to the channel setting. Use the number keys to edit this value and press <**ENTER**> to accept. Edit the channel number to the desired value and press <**ENTER**> to accept. **Channel Setting** 1-8 Channels that may be used with broadcast channel 1. The channel switch on the receiver must match this value and only the Broadcast 1 (BCAST1) jumper must be installed.
ENTER TO ACCEPT CLEAR TO MODIFY The LCD will toggle these screens	
BCAST GROUP 1 RADIO CHAN 01 The bottom line shows default settings.	

Multiple Controller w/Multiple Broadcast Systems Channel Setting

Typically all multiple controller systems will use Broadcast Group 1 Channel 1 for the first controller in Broadcast Group 1 and Broadcast Group 2 Channel 1 for the first controller in Broadcast Group 2. All other consoles in each group are added sequentially, using channels 2-4.

LCD Display	Action
RADIO SETTINGS BCAST Y CHAN XX The LCD will toggle these screens	The LCD shows the current radio settings along with a prompt to accept or modify these values. If the radio settings are correct press <**ENTER**>. If these values are incorrect press <**CLEAR**>.
ENTER TO ACCEPT CLEAR TO MODIFY	If <**CLEAR**> is pressed to modify the radio settings the LCD at the left is shown, allowing edit of the channel or broadcast group setting.
BCAST GROUP 1 RADIO CHAN 01 The bottom line shows default settings.	Edit the broadcast setting. Use the number keys to enter the desired broadcast group and press <**ENTER**> to accept. The asterisk will move to the channel setting. Use the number keys to edit this value and press <**ENTER**> to accept. Edit the channel number to the desired value and press <**ENTER**> to accept.

(Continued on next page)

(Continued from previous page)

LCD Display	Action
BCAST GROUP 1 RADIO CHAN 01 The bottom line shows default settings.	

Broadcast Group	Channel Setting	Control Scoreboards
0	0	All Scoreboards
1	0	All in BCAST Group 1
	1-8	Set to corresponding BCAST 1 Channel
2	0	All in BCAST Group 2
	1-4	Set to Corresponding BCAST 2 Channel
3	0	All in BCAST Group 3
	1-8	Set to corresponding BCAST 3 Channel
4	0	All in BCAST Group 4
	1-4	Set to corresponding BCAST 4 Channel

2.6 Standard Keys

The **Quick Reference** is located in **Appendix C**.

Start
<START> is used to start the main clock. The green LED on the **<START>** key is on while the main clock is running.

Stop
<STOP> is used to stop the main clock. The green LED on the **<START>** key is off while the main clock is stopped.

Enter/Yes
The **<ENTER/YES*>** key has two functions:

- Completes an action. The asterisk is a reminder that this key is to be pressed when an asterisk appears on the LCD.

- Serves as **<YES>** for input prompts.

Clear/No
The **<CLEAR/NO>** key has two functions:

- Clears the LCD of numerical information.

- Serves as **<NO>** for input prompts.

Edit
The **<EDIT>** key allows the user to select which field on the scoreboard to be edited (such as team score). After pressing the **<EDIT>** key, press one of the increment or decrement keys for the desired field on the scoreboard. Then simply enter the value you wish to display and press **<ENTER>** to accept.

Menu
The **<MENU>** key allows the user to select from a list of options specific for each sport. The up and down arrow keys allow the user to scroll through the menu list. The left and right arrow keys allow the user to enter and exit submenu lists for a specific menu item. Pressing a key other than **<YES>**, **<NO>**, the arrow keys, or other allowed keys, exists the Menu function.

Set Main Clock

LCD Display	Action
MAIN CLOCK -SET CURR MM:SS.T* MM:SS.T = minutes, seconds, tenths of a second	After the main clock has been stopped press <**SET MAIN CLOCK**> to display the current time of the main clock. To change the time enter the desired time on the number pad and press <**ENTER**>. Press <**CLEAR**> twice to clear changes and return to the game.
MAIN CLOCK -EDIT PERIOD MM:SS* MM:SS = minutes, seconds	Press <**SET MAIN CLOCK**> a second time or the down arrow key to display the configured time for the main clock period length. To accept the displayed period length press <**YES**>. To decline the selection of the period length press <**NO**>. To change the period length and set the main clock enter the new time in minutes and seconds on the number pad and press <**ENTER**>. **Note:** Pressing <**ENTER**> to select the period time as the main clock setting will increment the current period number if the clock value was previously zero. Press <**CLEAR**> twice to clear changes and return to the game.

(Continued on next page)

(Continued from previous page)

LCD Display	Action
MAIN CLOCK -EDIT BREAK MM:SS * MM:SS = minutes, seconds	Press <**SET MAIN CLOCK**> a third time or the down arrow key to display the configured time for break length. To accept the break length press <**YES**>. To decline the selection of the break length press <**NO**>. To change the break length and set the main clock enter the new time in minutes and seconds on the number pad and press <**ENTER**>. Press <**CLEAR**> twice to clear changes and return to the game.
MAIN CLOCK -EDIT OT MM:SS * MM:SS = minutes, seconds	Press <**SET MAIN CLOCK**> a fourth time or the down arrow key to display the configured time for overtime length. To accept the overtime length press <**YES**>. To decline the selection of the overtime length press <**NO**>. To change the overtime length and set the main clock enter the new time in minutes and seconds on the number pad and press <**ENTER**>. Press <**CLEAR**> twice to clear changes and return to the game.

(Continued on next page)

(Continued from previous page)

LCD Display	Action
MAIN CLOCK -EDIT PRE MM:SS * MM:SS = minutes, seconds	Press <**SET MAIN CLOCK**> a fifth time or the down arrow key to display the configured time for pre-game length. To accept the pre-game length press <**YES**>. To decline the selection of the pre-game length press <**NO**>. To change the overtime length and set the main clock enter the new time in minutes and seconds on the number pad and press <**ENTER**>. Press <**CLEAR**> twice to clear changes and return to the game.
MAIN CLOCK -EDIT POST MM:SS * MM:SS = minutes, seconds	Press <**SET MAIN CLOCK**> a sixth time or the down arrow key to display the configured time for post-game length. To accept the post-game length press <**YES**>. To decline the selection of the post-game length press <**NO**>. To change the overtime length and set the main clock, enter the new time in minutes and seconds on the number pad and press <**ENTER**>. Press <**CLEAR**> twice to clear changes and return to the game.

Count Up/Down

LCD Display	Action
MAIN CLOCK-DOWN 1-UP, 2-DOWN *UP/DOWN* = current direction	After the main clock has been stopped, the direction of the clock can be set. Press <**1**> or <**2**> to select **UP** or **DOWN** (default). **Notes:** The current direction of the main clock is shown on the top line of the LCD. The <**COUNT UP/DOWN**> function is disabled while the clock is running.

Auto Horn

LCD Display	Action
AUTO HORN-ON 1-ON, 2-OFF *ON/OFF* = current setting	Press <**1**> or <**2**> to select ON (default) or OFF. The amber LED on the <**HORN**> key is on when the Auto Horn feature is enabled. The LED is off when the Auto Horn feature is disabled and the horn is in Manual mode.

Manual Horn
Press **<HORN>** to sound the main horn. The horn sounds as long as the key is pressed. The horn stops sounding when the key is released.

2.7 Remote Start/Stop Controls

Main Clock Control
The remote Start/Stop control box plugs into J4 on the back of the All Sport 5000 console. This unit has a rocker switch for Start/Stop and a momentary button for horn. The Start/Stop switch starts and stops the main timer. The horn button sounds the horn as long as the button is pressed.

Shot Clock Control
The remote shot clock control box plugs into J7 on the back of the All Sport 5000 console. This unit has a rocker switch for Start/Stop and a momentary button for reset. When the reset button is pressed, the shot clock timer is changed to the reset value and stops the timer from decrementing. The shot clock timer restarts when the reset button is released. In independent mode, the Start/Stop switch starts and stops the shot clock timer when pushed, but does not stop when the main clock is stopped. When in synchronized mode, the shot clock timer will stop and start with the main clock switches only if it is running in the beginning.

2.8 General Multi-Purpose Timer Information

There is no insert for the Multi-Purpose Timer codes. Code 99 is used to operate the multi-purpose timer.

Note: The Multi-Purpose Timer is a general timer used for 2, 4 and 6 digit time displays. The timer will count up or down through hours, minutes, and seconds. The information will shift on the 2 and 4 digit displays to show the most significant time values as the time changes. The Multi-Purpose Timer code is also used as a Time-of-Day code by accessing the Time of Day Menu through the Menu Key. The segment Timer may also be accessed through the Menu Key.

Standard Keys
The keys that are used by the multi-purpose timer are **<START>**, **<STOP>**, **<SET MAIN CLOCK>**, **<COUNT UP/DOWN>**, **<AUTO HORN>**, **<MANUAL HORN>** and **<MENU>**. The key functions are explained in more detail in **Section 2.6**.

Accessing the Multi-Purpose Timer
Turn on the console, enter multi-purpose timer code and press **<ENTER>**.

Press the **<MENU>** key and press the down or up arrows until the following message is displayed:

LCD Display	Action
MENU-MAIN SELECT TOD?	Press <**YES**> to enter the Time of Day Menu.

Accessing the Segment Timer
Refer to **Section 3** for details on running this function of the All Sport 5000 console.

Turn on the console. Enter the multi-purpose sport code used for the scoreboard in use and press **<ENTER>**. A list of sport codes can be found in **Appendix B**.

Press the **<MENU>** key and press the down or up arrows until the following message is displayed:

Note: The segment timer function is disabled while the clock is running.

LCD Display	Action
MENU-MAIN ENTER DISPLAY MENU?	Press <**YES**> to enter the display menu.
MENU- DISPLAY RUN SEG TIMER Y/N	Press <**YES**> to exit the sport code and run the segment timer program.
EXIT GAME ARE YOU SURE Y/N	The console will prompt the user to press <**YES**> a second time to enter the segment timer to avoid accidental exit from the sport program. Refer to **Section 3** for more information on the segment timer.

Section 3: Segment Timer

Sport Insert: LL-2475 (Code 100 is for the dedicated Segment Timer)

The Sport Insert drawing is located at the end of this section. The **Quick Reference** is located in **Appendix D**.

Reference Drawings:

Insert, Segment Timer .....**Drawing A-129357**

Refer to the information in **Section 2** to start up the console and use the sport insert. Read **Section 2** carefully to fully understand the following operation instructions.

If an insert is lost or damaged, a copy of the insert drawing located at the end of this section can be used until a replacement can be ordered.

If you do not know the code number to enter for your scoreboard, refer to **Appendix B** in this manual. If you do not know the model number of your scoreboard, refer to the scoreboard **Installation and Maintenance** manual provided with the scoreboard.

3.1 Segment Timer Overview

The segment timer is a multi-function timing system and has multiple purposes. The operation of the segment timer is determined by ninety-nine segments of pre-programmed length. The segment timer will count down starting at the segment number that is set as **First Segment**. When the first segment is completed, the Segment Timer will count the preset **Interval Time** and proceed with the next segment. The timer will continue counting segments until the segment number that is set as **Last Segment** is complete. It then will reset to the segment saved as the **First Segment** and will either begin counting down or wait for the **<START>** key to be pressed depending on the **<AUTO STOP>** setting. Refer to **Subsection Auto Stop** in this section to set the segment-stopping feature.

The first and last segment values can be used to set up specific practice sessions. For example, the practice session for one sport could be programmed for five minute segments on segments 1-10 while another might use 10 minute segments on 11-20. Set the first segment and last segment values to the desired segment numbers for the session and the console will count down each of the segments in order. It may also be set to either stop on the last segment or loop back to the first segment segments again based on the **<AUTO STOP>** setting.

The segments values will be saved when the console is turned off and will be the same values regardless of the sport that was used to access the segment timer.

3.2 Accessing Segment Timer

Turn on the console. Enter the multi-purpose sport code used for the scoreboard in use and press **<ENTER>**. A list of sport codes can be found in **Appendix B**.

The segment timer program is accessed through the main menu of each individual sport. The **DISPLAY MENU** allows the user to start the segment timer. Press the **<MENU>** key and press the down or up arrows until the following message is displayed:

Note: The segment timer function is disabled while the clock is running.

LCD Display	Action
MENU-MAIN ENTER DISPLAY MENU?	Press <**YES**> to enter the display menu. Press <**YES**> to exit the sport code and run the segment timer program.
MENU- DISPLAY RUN SEG TIMER Y/N	The console will prompt the user to press <**YES**> a second time to enter the segment timer to avoid accidental exit from the sport program.
EXIT GAME ARE YOU SURE Y/N	Refer to **Section 3.1** for general segment timer operation instructions.

3.3 Accessing 2-Digit or 6-Digit Display Segment Timer

This code is only used for the two-digit or six-digit displays designed exclusively for segment timing. Enter code **100** after turning on the All Sport console to access the exclusive segment timer program. For all other scoreboards, enter the correct scoreboard code and use **<MENU>** to access the segment timer. Refer to **Section 3.2**.

3.4 Segment Timer Keys

Segment No • Time •

The **<SEGMENT NO • TIME •>** key is used to edit each segment's time. Select the segment to be edited, and enter the time desired. Follow the directions below to accomplish this.

LCD Display	Action
SEGMENT: XX TIME EDIT *XX* = segment number	Press <**SEGMENT NO • TIME •**> to set individual segment times. Enter the segment to be edited with the keypad and press **<ENTER>**.
SEGMENT: XX TIME EDIT NN:NN *XX* = segment number *NN:NN* = segment time	Enter the time for the segment with the keypad. Press **<ENTER>** to accept the time and move to the next segment time. Press **<ENTER>** again to exit the function. Press the up or down arrow keys to move to the previous or next segment.

First Segment

This key sets the first segment in a range of segments to run when **<START>** is pressed.

LCD Display	Action
FIRST SEGMENT NN *NN* = current first segment	Press <**FIRST SEGMENT**> and enter the segment to be set as the last segment. Press **<ENTER>** to accept the time and exit the function. The console will be reset to the segment selected here when the **<RESET TO FIRST>** key is pressed.

Last Segment
This key sets the last segment in a range of segments to run when **<START>** is pressed.

LCD Display	Action
LAST SEGMENT NN NN = current last segment	Press <**LAST SEGMENT**> and enter the segment to be set as the first segment. Press **<ENTER>** to accept the time and exit the function. After the segment set as the last segment is completed, the console will automatically reset to the segment saved as the first segment.

Interval Time
The interval time is the time between each segment. The interval time can be displayed on the Guest Scoreboard digits using the **<DISPLAY INTERVAL>** key.

LCD Display	Action
INTERVAL TIME: NN:NN NN = current setting	Press **<INTERVAL TIME>** to display the current value of interval time on the bottom line of the LCD. Edit the value of the interval time and press **<ENTER>**.

Display Interval
This setting determines whether the interval count will be displayed on the scoreboard.

LCD Display	Action
DISPLAY INTERVAL YES OR *NO? * = current setting	Press **<YES>** to display the interval time on the scoreboard. Press **<NO>** to disable interval time display. The interval time will be displayed only on the console if **NO** is selected. **Notes:** Regardless of this setting, the value saved in interval time will be counted down between segments. Set the interval time to zero if no interval between segments is desired. When the interval time is being displayed, the segment number on the scoreboard flashes to indicate that the time displayed is interval time.

Copy Range
This key sets a range of segments to a specific value.

LCD Display	Action
COPY: NN:NN* SEG XX TO YY NN:NN = segment value to be copied xx = starting segment value yy = ending segment value	Press **<COPY RANGE>** and enter the time desired. Press **<ENTER>** to move to the next field. The asterisk denotes which field is currently being edited. When the last segment in the copy range is set the menu will be exited. Once completed, all segments from xx to yy (inclusive) will be set to the value specified by nn:nn.

Auto Stop
This key is the auto stop function of the console.

Note: To set the console to stop after the last segment in the series is completed, the auto stop at each segment setting must be set to NO.

LCD Display	Action
AUTO STOP AT EACH SEG Y/N* *= current setting	Press <**AUTO STOP>**to enter this menu. Press **<YES>** to set the console to stop after each segment is completed. Press **<START>** to proceed with the next segment. Press **<NO>** to set the console to automatically begin the next segment when each segment is completed. The console will prompt for the auto stop at last segment setting.
AUTO STOP AT LAST SEG *Y/N * = current setting	Press **<YES>** to set the console to stop when the last segment has been completed. Press **<NO>** to set the console to start over at the first segment when the last segment is completed

Reset to First
Press **<RESET TO FIRST>** to reset the segment number to the segment set as the first segment. Refer to **Subsection First Segment**.

Note: The reset to first function is disabled while the clock is running.

Reset Current Segment
Press **<RESET CURRENT SEGMENT>** to reset the segment time to the value specified by the current segment. The segment number will remain at the current value.

Current Segment
Press **<CURRENT SEGMENT +1>** to increment the segment number.

Default Settings
Write the settings for this installation in the space (Custom) provided.

Setting	Default	Custom 1	Custom 2	Custom 3	Custom 4
First Segment	1				
Last Segment	99				
Warning Timer	00:00				
Display Interval	No				
Auto Stop on Each Segment	No				
Auto Stop At Last Segment	Yes				

3.5 Edit

Current Segment

LCD Display	Action
CURRENT SEGMENT: EDIT NN NN = current setting	Press **<EDIT><CURRENT SEGMENT + 1>** to display the current segment for editing. Enter the new value for the current segment number and press **<ENTER>**.

3.6 Menu

The **<MENU>** key allows the user to select from a list of options specific for each sport. The up and down arrow keys allow the user to scroll through the menu list. Pressing a key other than **<YES>**, **<NO>**, the arrow keys, and other allowed keys, exit the Menu function.

New Code

LCD Display	Action
MENU-MAIN NEW CODE?	Press **<YES>** to begin selection of a new code from the **ENTER CODE** prompt. Press **<NO>** to resume the game in progress using the current data and exit the Menu. Press the down arrow key to scroll to the next selection.

Warning Time

LCD Display	Action
WARNING TIME 00:00 00:00 = default	Enter the warning time in minutes and seconds and press**<ENTER>**. Enter 00:00 for no warning time. When the warning time is reached, the segment number flashes until the main clock reaches zero.

Dim/Bright

LCD Display	Action
MENU- DIMMING LEVEL (0-9): NN% NN = current level NONE = bright <**0**> 90% = <**1**> 80% = <**2**> 70% = <**3**> 60% = <**4**> 50% = <**5**> 40% = <**6**> 30% = <**7**> 20% = <**8**> 10% = <**9**>	Press <**0**> through <**9**> or use the arrow keys <←> <→> to select the intensity for the digits on the scoreboard. Press <**NO**> to resume the game in progress using the current data and exit the Menu. Press the down arrow key <↓> to scroll to the next selection. **Note:** Dim levels pertain to outdoor LED products. Indoor LED and incandescent products only support one level of dimming at 50%.

Section 4: Baseball Operations

Sport Insert: LL-2438

The Sport Insert drawing is located at the end of this section. The Team Name insert and Block Diagram drawings are located in **Appendix A**. The **Quick Reference** is located in **Appendix D**.

Reference Drawings:

Insert, Baseball .....**Drawing A-125061**
Insert, Team Name .....**Drawing A-125290**
Block Diagrams, A/S5000/3000, Outdoor Sports .....**Drawing A-124690**

Refer to the information in **Section 2** to start up the console and how to use the sport insert. Read **Section 2** carefully to fully understand the following operation instructions.

If an insert is lost or damaged, a copy of the insert drawings are located at the end of this Appendix B, which can be used until a replacement can be ordered.

Use the labels provided in **Appendix B** to attach the correct code number label to the sport insert in the appropriate location. Write the code number in the space provided below.

Write the correct code number here.

If you do not know the code number to enter for your scoreboard, refer to **Appendix B** in this manual. If you do not know the model number of your scoreboard, refer to the **Installation and Maintenance** manual provided with the scoreboard.

4.1 Baseball Keys

Inning +1

Note: If game stats are being received from DSTI the keys on the console will be disabled. The LCD will display the messages shown below when these keys are pressed.

LCD Display	Action
STATS RECEIVED KEY DISABLED EXIT STATS MODE Y/N?	The key disabled message will display for one second and then the <**EXIT STATS**> message will display and wait for a <**YES**> or <**NO**> key. If the <**YES**> key is pressed the stats data will be saved in the console and the console will <**EXIT STATS**> mode until another stats packet is received. This will allow the operator to enter player stats from the console if the DSTI feed is lost.

LCD Display	Action
INNING-+1 N N = current setting	Press <**INNING +1**> to increment the current inning number. The LCD shows the new value.

Out +1

The current out number is displayed on the main LCD screen.

Press **<OUT +1>** to increment the current out number.

Press **<OUT +1>** to set the out value to 0 when the current value is 3.

Notes: Refer to **Subsection Auto Increment Inning.**

The <**OUT +1**> key automatically increments the inning and resets the out number to zero when:

- The Auto Inning Increment setting is on.
- The **home** AT BAT indicator is on.
- The current out number is 3.

The <**OUT +1**> key turns on the **home** AT BAT indicator when:

- The Auto Inning Increment setting is on.
- The **guest** AT BAT indicator is on.
- The current out number is 3.

Batter, Average, Clear Batter/Average

The **<BATTER>** and **<AVERAGE>** keys are used to display the uniform number and batting average of the player currently at bat. Pressing the **<CLEAR BATTER/ AVERAGE>** key sets both batter and average to blank.

LCD Display	Action
AT BAT NN* NN = current setting	When the <**BATTER**> key is pressed enter the number of the player and press <**ENTER**>.
AVERAGE NNN* NNN = current setting	When the <**AVERAGE**> key is pressed enter the batting average of the player and press <**ENTER**>. The value will be filled with leading zeros when it is entered.

Ball Count, Strike Count, Clear Count
The **<BALL COUNT +1>** and **<STRIKE COUNT +1>** keys increment the Ball and Strike digits. Pressing the **<CLEAR COUNT>** key sets the both counts to zero.

When the Auto Pitch Increment setting is on, the **<BALL COUNT +1>** and **<STRIKE COUNT +1>** keys automatically increment the ball and strike **pitch** count data of the team that is not at bat (AT BAT indicator off).

If the Ball Count value is 4 when **<BALL COUNT +1>** is pressed the value is blanked out. Press **<BALL COUNT +1>** a second time to set the value to zero.

If the Strike Count value is 3 when **<STRIKE COUNT +1>** is pressed the value is blanked out. Press **<STRIKE COUNT +1>** a second time to set the value to zero.

Ball and strike pitch count data is not incremented when the **<BALL COUNT +1>** and **<STRIKE COUNT +1>** values are incremented to blank or zero.

Hit, Error, Clear Hit/Error
The **<HIT>** and **<ERROR>** keys are used to turn on the Hit or Error indicator or digits. On some scoreboards the **<ERROR>** key can also display the player's position when the **Error Position** setting is on. Pressing the **<CLEAR HIT/ERROR>** key turns off the Hit and Error indicators and clears the digits. **<ERROR>** is used for an example.

LCD Display	Action
ERROR: ON	Press the <**HIT**> or <**ERROR**> key to turn on the Hit or Error indicator or digits. This display appears briefly.
ERROR: POSITION N	When the <**ERROR**> key is pressed enter the position number of the player and press <**ENTER**>. This prompt only appears when the **Error Position** in **Edit Settings** is on.
HIT: OFF ERROR: OFF	Press the <**CLEAR HIT/ERROR**> key to turn off the Hit and Error indicators and clear the digits. This display appears briefly.

At Bat

The **<AT BAT>** keys turn the home and guest at bat indicators on and off. It also clears the ball, strike, and out count and sets batter and average to blank when the **At Ba**t is turned on.

LCD Display	Action
HOME AT BAT ON	Press the home or guest <**AT BAT**> key to turn on the at bat indicator for that team. This display appears briefly.
HOME AT BAT OFF	To turn off the possession indicator, press the same <**AT BAT**> key a second time or press the opposite <**AT BAT**> key. This display appears briefly. The current status of the At Bat indicator is shown by the location of the **>** on the main LCD screen.

Runs

The function of the **<RUNS +1>** key is determined by the Score By Inning setting. If Score By Inning is disabled, only the team total is incremented. If Score By Inning is enabled, both the team total and the total inning scores are incremented.

LCD Display	Action
TEAM RUNS: +1 HOME NN NN = current setting	When the Score By Inning setting is **disabled**: Press the appropriate <**RUNS +1**> key to increment the total number of runs for the home or guest team. The LCD shows which key was pressed and the new value for the corresponding team.
RUNS HOME +1 INNING NN= XX NN = current inning XX = inning score	When the Score By Inning setting is **enabled**: Press the appropriate **<RUNS +1>** key to increment the number of runs by inning and the game total for the home or guest team. The game total is the sum of all inning scores. The LCD shows which key was pressed and the new value for the corresponding team.

Hits, Errors, Left on Base

The home and guest **<HITS +1>**, **<ERRORS +1>** and **<LEFT ON BASE +1>** keys are all used to increment their respective totals. **<HITS +1>** is used as an example.

LCD Display	Action
HITS: +1 HOME NN NN = current setting	Press the appropriate key to increment statistics for the home or guest team. The LCD shows which key was pressed and the new value for the corresponding team.

Pitch Count, Foul Balls, In Play

The home and guest **<PITCH COUNT BALLS +1>**, **<PITCH COUNT STRIKES +1>**, **<FOUL BALLS +1>**, and **<IN PLAY +1>** keys are all used to increment the pitch count data of the team that is not at bat. **<FOUL BALLS +1>** is used as an example.

LCD Display	Action
FOUL BALLS: +1 H. PITCHER NNN NNN = current setting	Press the appropriate key to increment statistics for the pitcher's team (home or guest). The LCD shows which key was pressed and the new value for the corresponding team.

4.2 Edit

The **<EDIT>** key allows the user to select and edit the following scoreboard fields. Press **<EDIT>** and the key for the home or guest field to be edited.

Inning +1

Note: Do not use **<EDIT> <INNING +1>** to edit the Score By Inning. Use **<EDIT> <RUNS +1>**.

LCD Display	Action
INNING EDIT NN NN = current setting	Press <**EDIT**> <**INNING +1**> to display the current setting. Enter the correct inning number on the number pad and press <**ENTER**>.

Runs

The way that **Runs** are edited is determined by the Score By Inning setting. If Score By Inning is disabled, only the team total can be edited. If Score By Inning is enabled the total by inning can be edited and the team total is automatically updated.

LCD Display	Action
TEAM RUNS: EDIT NN NN = current setting	When the Score By Inning setting is **disabled**: Press <**EDIT**> and the appropriate <**RUNS +1**> key to display the current setting for the home or guest team. Enter the correct number on the number pad and press <**ENTER**>.
EDIT HOME RUNS INNING 01 = NN NN = current setting	When Inning is **enabled**: Press the appropriate <**RUNS +1**> key to display the number of runs by inning for the home or guest team. Use the up and down arrow keys to scroll to the inning to be edited and press <**ENTER**>. Enter the correct number of runs on the number pad and press <**ENTER**>. The game total is automatically updated. The LCD shows which key was pressed and the new value for the corresponding team.

Hits, Errors, Left on Base

The home and guest **<HITS +1>**, **<ERRORS +1>** and **<LEFT ON BASE +1>**keys are all edited in the same way. **<HITS +1>** is used as an example.

LCD Display	Action
TEAM HITS: EDIT HOME NN NN = current setting	Press <**EDIT**> and the appropriate statistic key to display the current setting. Enter the correct number on the number pad and press <**ENTER**>.

4.3 Menu

The **<MENU>** key allows the user to select from a list of options specific for each sport. The up and down arrow keys allow the user to scroll through the menu list. Pressing a key other than **<YES>**, **<NO>**, the arrow keys, and other allowed keys exit the Menu function.

The **MENU** function should be used at the beginning of each new game to edit the Home and Guest Rosters.

New Game

LCD Display	Action
MENU-MAIN NEW GAME?	Press <**YES**> to clear all of the program data for the last game played or the game in progress and begin running the selected sport. Press <**NO**> to resume the game in progress using the current data and exit the Menu. Press the down arrow key to scroll to the next selection.

New Code

LCD Display	Action
MENU-MAIN NEW CODE?	Press <**YES**> to begin selection of a new code from the ENTER CODE prompt. Press <**NO**> to resume the game in progress using the current data and exit the Menu. Press the down arrow key to scroll to the next selection.

Home Roster, Guest Roster

Home Roster and **Guest Roster** are entered in the same way. Home Roster is used as an example.

LCD Display	Action
MENU-ROSTER SELECT HOME	Press <**YES**> or the right or left arrow key to select the Home or Guest Roster submenu and show the first prompt on the LCD. Press <**NO**> to resume the game in progress using the current data and exit the Menu Press the down arrow key to scroll to the next selection.
HOME-TEAM NAME AAAAAAAAAAAAA*	**The TEAM NAME (LL-2441) insert must be inserted to enter the Team Name Message Center (TNMC) settings.** The TNMC is updated after each selection is completed. Use the **COLUMNS, ROWS** and **STROKE** keys to select the **WIDTH, HEIGHT** and **FONT** of the TNMC. The defaults are 48 columns, 8 rows and single stroke. Enter up to fifteen (15) characters for the team name and press <**ENTER**>. Reinsert the BASEBALL (LL-2438) insert to continue.
HOME-TEAM ABBR AAAAAAAAAA*	The TEAM NAME (LL-2441) insert must be inserted to enter the Team Name Message Center (TNMC) settings. The TNMC is updated after each selection is completed. Use the **COLUMNS, ROWS** and **STROKE** keys to select the **WIDTH, HEIGHT** and **FONT** of the TNMC. The defaults are 48 columns, 8 rows and single stroke. Enter up to ten (10) characters for the team abbreviation and press <**ENTER**>. Reinsert the BASEBALL (LL-2438) insert to continue.

PITCHER NUMBER HOME NN *NN* = current setting	Enter the jersey number of the new pitcher and press <**ENTER**>. Press the down arrow key to scroll to the next selection.
CLEAR HOME PITCHES Y/N?	This function clears pitch count statistics and should only be used before the start of a game or when a new pitcher enters the game. Press <**YES**> to clear the in-game status, fouls and points for all players in the home roster. Press <**NO**> to decline the selection. Press the down arrow key to scroll to the next selection.

Display Menu

The **Display Menu** allows the user to start and edit the segment timer or to change the brightness of the scoreboard.

LCD Display	Action
MENU-MAIN ENTER DISPLAY MENU?	Press <**YES**> to select the Display submenu and show the first prompt on the LCD. Press the down arrow key to scroll to the next selection.

LCD Display	Action
MENU-DISPLAY RUN SEG TIMER Y/N	**Note:** The segment timer function is disabled while the clock is running. Press <**YES**> to exit the sport code and run the segment timer program. Press <**NO**> or the down arrow key to scroll to the next selection.
EXIT GAME ARE YOU SURE Y/N	This prompt confirms that the user wants to exit the sport code and enter the segment timer **Note:** The SEGMENT TIMER (LL-2475) insert must be inserted to enter the Segment Timer settings. Refer to **Section 3** for more information on the segment timer. Press <**YES**> to exit the sport code and run the segment timer program. Press <**NO**> or the down arrow key to scroll to the next selection.

(Continued on next page)

(Continued from previous page)	
MENU- DIMMING LEVEL (0-9): NN% NN = current level NONE = bright <0> 90% = <1> 80% = <2> 70% = <3> 60% = <4> 50% = <5> 40% = <6> 30% = <7> 20% = <8> 10% = <9>	Press <**0**> through <**9**> or use the arrow keys <←> <→> to select the intensity for the digits on the scoreboard. Press <**NO**> to resume the game in progress using the current data and exit the Menu. Press the down arrow key <↓> to scroll to the next selection. **Note:** Dim levels pertain to outdoor LED products. Indoor LED and incandescent products only support one level of dimming at 50%.

Edit Settings

LCD Display	Action
MENU-MAIN EDIT SETTINGS?	Press <**YES**> or the right or left arrow key to select the Settings submenu and show the first prompt on the LCD. Refer to **Section 4.4**. Press <**NO**> to resume the game in progress using the current data and exit the Menu. Press the down arrow key to scroll to the next selection.

Time of Day

LCD Display	Action
MENU-MAIN SELECT TOD?	Press <**YES**> or the right arrow key to select the Time of Day submenu and show the first prompt on the LCD. Press <**NO**> to resume the game in progress using the current data and exit the Menu.

(Continued on next page)

*(Continued from **previous** page)*

LCD Display	Action
MENU-TIME OF DAY 1*12, 2-24 HOUR	Press <**1**> or <**2**> to display the time of day in 12 hour (default) or 24 hour format. Press <**ENTER**> or the down arrow key to scroll to the next selection.
MENU-TIME OF DAY TOD HH:MM:SS* HH:MM:SS = current setting	Enter the time of day in hours, minutes and seconds using the selected format on the number pad and press <**ENTER**>. Press <**ENTER**> or the down arrow key to scroll to the next selection.
MENU-TIME OF DAY 1*GAME 2-TOD * = current setting	Press <**1**> or <**2**> to display the game clock (default) or the time of day clock on the scoreboard. Press the down arrow key to exit the Menu and return to the game.
MENU-TIME OF DAY BLANK GAME DATA?	If 2-tod is selected, this message will be displayed. Press <**ENTER**> to blank all game data on the scoreboard except for the Time of Day digits.

4.4 Settings

The user can edit the following settings when **Edit Settings** has been selected from the Main Menu.

Main Clock

Note 1: The settings entered for **Main Clock** are used with the **<SET MAIN CLOCK>** key.

Note 2: The period, break, and overtime lengths are used differently depending on the direction of the main clock. For count down, the main clock is set to the selected length, decrements towards zero, and stops at zero. For count up, the main clock is set to zero, increments towards the selected length, and stops when the selected length is reached.

LCD Display	Action
MAIN CLOCK-TIME PERIOD HH:MM:SS HH:MM:SS = current setting	Enter the correct amount of time per period in minutes and seconds on the number pad and press <**ENTER**>. For example, 02:00:00 per game.

Error Position

On some scoreboards the **<ERROR>** key can also display the player's position when the **Error Position** setting is on.

LCD Display	Action
ERROR POSITION *ON ← →OFF * = current setting	Press the **left** arrow key if the scoreboard **can** display the player position, then press <**ENTER**>. Press the **right** arrow key if the scoreboard **cannot** display the player position, then press <**ENTER**>.

Auto Increment Pitches

When the **Auto Pitch Increment** setting is on and the AT BAT indicator for the batting team is on, the **<BALL COUNT +1>** and **<STRIKE COUNT +1>** keys automatically increment the Ball and Strike pitch count data of the team that is not at bat (AT BAT indicator off).

LCD Display	Action
AUTO INCREMENT PITCHES Y/N? N* N = current setting	Press <**YES**> to use the <**BALL COUNT +1**> and <**STRIKE COUNT +1**> keys to automatically increment the Ball and Strike pitch count data. Press <**NO**> to use the <**PITCH COUNT BALLS +1**> and <**PITCH COUNT STRIKES +1**> keys to manually increment the Ball and Strike pitch count data.

Auto Increment Inning
The **<OUT +1>** key automatically increments the inning and resets the out number to zero when:

- The Auto Inning Increment setting is on.
- The **Home** AT BAT indicator is on.
- The current out number is 3.

The **<OUT +1>** key turns on the **Home** AT BAT indicator when:

- The Auto Inning Increment setting is on.
- The **Guest** AT BAT indicator is on.
- The current out number is 3.

LCD Display	Action
AUTO INCREMENT INNING Y/N? N* N* = current setting	Press <**YES**> to automatically increment the inning. Press <**NO**> to disable this function.

Score by Inning
Some scoreboards display both the total score and the score by inning.

Note: If the Score By Inning setting is not enabled, the **Display Innings** and **Inning Sequence** settings are not displayed.

LCD Display	Action
SCORE BY INNING Y/N? N* N* = current setting	Press <**YES**> if the scoreboard displays the score by inning. Press <**NO**> if the scoreboard only displays the total score.

Inning Sequence
Note: The Inning Sequence setting is not displayed if the Score By Inning setting is not enabled.

Use Inning Sequence when the number of innings played exceeds the number of innings that can be displayed on the scoreboard.

Select **SHIFT** when real time data (RTD) is used to display the inning numbers. **SHIFT** moves all of the inning numbers and scores left one digit. The innings and scores automatically shift when **<INNING +1>** is incremented and the inning number exceeds the number of displayed innings.

For example:

Inning	1 2 3 4 5 6 7 8 9 10	becomes	2 3 4 5 6 7 8 9 10 11
Score	0 0 1 0 2 0 0 0 0 0		0 1 0 2 0 0 0 0 0 _

Select **BLANK** when the inning numbers are in a fixed position using decals. **BLANK** starts a new set of inning numbers.

For example:

Inning	1 2 3 4 5 6 7 8 9 10	becomes	11 12 13 14 15 16 17 18 19 20
Score	0 0 1 0 2 0 0 0 0 0		_ _ _ _ _ _ _ _ _ _

LCD Display	Action
INNING SEQUENCE *SHIFT←→BLANK * = current setting	Press the **left** arrow key to **shift** all of the inning numbers and scores left one digit then press <**ENTER**>. Press the **right** arrow key to blank all of the inning numbers and start a new set then press <**ENTER**>.

Display Innings
Select the number of innings that the scoreboard can display.

Note: The **Display Innings** setting is not displayed if the **Score By Inning** setting is not enabled.

LCD Display	Action
DISPLAY INNINGS SIZE NN NN = number up to 12	Enter the number of innings to be shown up to 12 and then press <**ENTER**>.

Display Time
Select if **Time** or **At Bat** will be displayed on the scoreboard.

Note: This applies only to BA-2001 and BA-2005 scoreboards.

LCD Display	Action
DISPLAY TIME Y/N *TIME ←→AT BAT * = current setting	Pressing <**YES**> will select "Time". Pressing <**NO**> will select "At Bat". An asterisk will indicate which is selected.

Select Captions

LCD Display	Action
SELECT CAPTIONS ON 1← →2 OFF	This menu option allows for the controlled backlit captions to be turned ON/OFF. Press the <**1**> key to select ON and OFF for captions controlled by control #1. Press the <**2**> key to select ON and OFF for captions controlled by control #2.

Switch Output
The All Sport 5000 series console has a switch that can be used to drive a number of different devices. The switch can be configured to operate under different settings. The default setting is 1-CLOCK= 0.

To display the switch setting that you want to select:

Press the number (0,1,2,3) key as a shortcut or use the left and right arrow keys to scroll to the desired setting.

Press **<YES>** to select the new setting.

Press **<NO>** or the down arrow key to leave the switch setting and display the next prompt.

The possible settings for the switch output are displayed on the following page:

Setting	Result
0 - DISABLED SWITCH OUTPUT=N 0-DISABLED? N = current setting	The switch remains open at all times and any external devices are disabled.
1-CLOCK = 0 SWITCH OUTPUT=N 1-CLOCK =0? N = current setting	In count down mode, the switch closes when the main clock reaches zero and remains closed until a nonzero value is entered. In count up mode, the switch closes when the main clock reaches the proper period, break, or overtime length and opens when any other value is entered.
2-CLOCK STOP SWITCH OUTPUT=N 2-CLOCK STOP? N = current setting	The switch closes when the main clock is stopped and opens when the main clock is running. External devices are disabled when the main clock is running.
3-MAIN HORN SWITCH OUTPUT=N 3-MAIN HORN? N = current setting	The switch closes when the main horn sounds. This could be when Auto Horn is enabled and the main clock reaches zero or when <**HORN**> is pressed.

Default Settings

Write the settings for this installation in the space (Custom) provided.

Setting	Default	Custom 1	Custom 2	Custom 3
Period Length	00:00			
Error Position	On			
Auto Increment Pitches	No			
Auto Increment Inning	No			
Score by Inning	No			
Inning Sequence	Blank			
Display Inning	10			
Switch Output	1-Clock = 0			

Section 5: Pitch and Speed

Sport Insert: LL-2482

The Sport Insert drawing is located at the end of this section. The Quick Reference is located in **Appendix D**.

Reference Drawings:

Insert, Pitch Speed.....**Drawing A-130895**

Refer to the information in **Section 2** to start up the console and use the sport insert. Read **Section 2** carefully to fully understand the following operation instructions.

If an insert is lost or damaged, a copy of the insert drawing located at the end of this section can be used until a replacement can be ordered.

Use the labels provided to attach the correct code number label to the sport insert in the appropriate location. Write the code number in the space provided below.

If you do not know the code number to enter for your scoreboard, refer to **Appendix B** in this manual. If you do not know the model number of your scoreboard, refer to the scoreboard **Installation and Maintenance** manual provided with the scoreboard.

5.1 General Pitch and Speed Information

Note: The pitch and speed program interfaces with the JUGS or STALKER radar gun to provide pitch and speed information. The pitch type and speed can be displayed on a matrix display, or the speed only may be displayed on a fixed digit display.

5.2 Pitch and Speed Keys

Pitch Keys

Note: In Auto mode, the pitch keys are not used.

The keys on the left side of the keypad are used to select the type of pitch for manual display mode. In manual display mode the console waits to send the received pitch speed until a pitch type key is pressed. Once a pitch type is selected, the pitch data is updated on the display and sent as Real Time Data (RTD.)

Display Speed

<DISPLAY SPEED> is used in manual mode to send the speed to the display as speed only (blank frame.)

Blank Time

LCD Display	Action
BLANK TIME MM:SS MM:SS = current blank time	This setting determines the length of time before speed and pitch data is blanked on the display. Set Blank Time to 00:00 to display speed and pitch data continuously.

Speed

LCD Display	Action
EDIT SPEED NNN MPH NNN = current speed	The <**SPEED**> key edits the value of speed that is displayed on the scoreboard. The value is edited as miles per hour or kilometers per hour depending on the current display setting.

Show MPH and Show KPH

The **<SHOW MPH>** key displays the current pitch speed in miles per hour. The **<SHOW KPH>** key displays the current pitch speed in kilometers per hour.

Cycle MPH/KPH and Cycle KPH/MPH

Sets the order of cycle on a fixed digit speed display.

The **<CYCLE MPH/KPH>** key sets the console to display miles per hour 1st followed by kilometers per hour when a new pitch speed is received.

The **<CYCLE KPH/MPH>** key displays kilometers per hour followed by miles per hour.

Cycle Time

LCD Display	Action
CYCLE TIME MM:SS MM:SS = current cycle time	This setting determines the length of time each speed reading is displayed (MPH and KPH) before displaying the opposite reading. **Note:** If the console is set to cycle, a "Y" will be displayed next to "CYCLE" on the LCD menu. Press <**CYCLE MPH/KPH**> or <**CYCLE KPH/MPH**> to set console to cycle mode.

Pitch Count Keys (Home and Guest)

Pressing one of the pitch count keys will increment the value by one. To edit one of the values, use **<EDIT>** as described below.

LCD Display	Action
H. PITCHER EDIT STRIKE: NNN NNN = current value	To edit one of the pitch count values, press <**EDIT**> and then press the key of the item to be modified. The current value will be shown on the LCD. Enter the new value on the number pad and press <**ENTER**>.

Clear Pitch Count

LCD Display	Action
G. PITCHER CLEAR ALL Y/N?	Press <**CLEAR PITCH COUNT**> and the console will display the question "Clear All Y/N?" Press <**ENTER**> to clear the pitch counts or <**CLEAR**> to abort the operation.

Display Home/Guest Count

Pressing **<DISPLAY HOME COUNT>** or **<DISPLAY GUEST COUNT>** will send the RTD information with a specific frame number for Home or Guest. This frame number can be used to select the pitch count frame on a matrix display. The frame number is 19 for Home and 20 for Guest.

5.3 Menu

The **<MENU>** key allows the user to select from a list of options specific for each sport. The up and down arrow keys allow the user to scroll through the menu list. Pressing a key other than **<YES>**, **<NO>**, the arrow keys, and other allowed keys, exits the Menu function.

New Game

LCD Display	Action
MENU-MAIN NEW GAME?	Press <**YES**> to clear all of the program data for the last game played or the game in progress and begin running the selected sport. Press <**NO**> to resume the game in progress using the current data and exit the Menu. Press the down arrow key to scroll to the next selection.

New Code

LCD Display	Action
MENU-MAIN NEW CODE?	Press <**YES**> to begin selection of a new code from the ENTER CODE prompt. Press <**NO**> to resume the game in progress using the current data and exit the Menu. Press the down arrow key to scroll to the next selection.

Dimming Menu

The **Dimming Menu** allows the user to change the brightness of the scoreboard.

LCD Display	Action
MENU- DIMMING LEVEL (0-9): NN% NN = current level NONE = bright <**0**> 90% = <**1**> 80% = <**2**> 70% = <**3**> 60% = <**4**> 50% = <**5**> 40% = <**6**> 30% = <**7**> 20% = <**8**> 10% = <**9**>	Press <**0**> through <**9**> or use the arrow keys <←> <→> to select the intensity for the digits on the scoreboard. Press <**NO**> to resume the game in progress using the current data, and exit the Menu. Press the down arrow key <↓> to scroll to the next selection. **Note:** Dim levels pertain to outdoor LED products. Indoor LED and incandescent products only support one level of dimming at 50%.

Radar Gun Type

LCD Display	Action
RADAR GUN TYPE *JUGS←→STALKER * = current setting	Press the left or right arrow keys to select the type of radar gun to interface with and press <**ENTER**>.

LCD Display	Action
STALKER GUN TYPE *SPORT←→PRO * = current setting	If the gun is a stalker type, the next prompt will be to select which type of stalker gun is used. Press the left or right arrow keys to select and press <**ENTER**>.

Speed Adjust Coefficient

LCD Display	Action
SPEED ADJUST .NNNN NNNN = current setting	In some locations, the radar gun is mounted at an angle offset from the direct line of the pitch, resulting in a lower speed than actual. If this is the case for your application, enter the cosine of the angle between the pitcher-catcher line and the radar gun. The console will adjust the speed received accordingly. Set the speed adjust coefficient to 0 if no speed adjustment is necessary.

Angle Offset	Coefficient
10°	0.9848
15°	0.9659
20°	0.9397
25°	0.9063
30°	0.866

Approximately every one hundredth from the coefficient will increase the speed by one mph.

Example: 0.9848 = 95mph
0.9748 = 96mph

For more exact calculations refer to **Drawing A-243741**

Select Speed

LCD Display	Action
SELECT RANGE SPEED: >NN MPH NN= current setting	This setting allows the user to select a minimum speed that will be accepted from the radar gun. The default speed setting is zero mph and will allow all speeds.

Speed Indicator

LCD Display	Action
SELECT INDICATOR 1ST NN* MPH NN= current setting	This setting allows the user to select the speed at which the three speed indicators should light. Speeds below the 1st setting will light the 1st indicator.
SELECT INDICATOR 2ND NN* MPH NN= current setting	Speeds equal to or greater than the 1st and less than the 2nd setting will light the second indicator. Speeds greater than this will logout the 3rd indicator. Enter the desired value and press <**ENTER**>.

Display Mode

LCD Display	Action
DISPLAY MODE *AUTO←→MANUAL * = current setting	This setting determines when the pitch information received will be updated to fixed digit scoreboards and RTD. In Auto mode scoreboards and RTD is updated as soon as speed information is received from the radar gun. In Manual mode the console waits for one of the pitch keys to be pressed before updating with the new pitch speed. **Note:** In Auto mode the pitch keys are not used.

Default Settings

Write the settings for this installation in the space (Custom) provided.

Setting	Default	Custom 1	Custom 2	Custom 3
Radar Gun Type	JUGS			
Speed Adjust Coefficient	0			
Cycle Time	00:05			
Blank Time	00:20			
Display Mode	AUTO			

RTD Item Numbers

The Pitch and speed program uses unique RTD item numbers to display speed and pitch information. Items 23-25 display either MPH or KPH depending on cycle and display settings.

Item #	Data
1	MPH x100
2	MPH x10
3	MPH x1
4-19	Pitch type text – 16 characters
20	KPH x100
21	KPH x10
22	KPH x1
23	MPH/KPH x100
24	MPH/KPH x10
25	MPH/KPH x1
26	MPH indicator
27	KPH indicator
28	Home Ball count x100
29	Home Ball count x10
30	Home Ball count x1
31	Home Strike count x100
32	Home Strike count x10
33	Home Strike count x1
34	Home Total Pitch count x100
35	Home Total Pitch count x10
36	Home Total Pitch count x1
37	Home Strike Out count x100
38	Home Strike Out count x10
39	Home Strike Out count x1
40	Guest Ball count x100
41	Guest Ball count x10
42	Guest Ball count x1
43	Guest Strike count x100
44	Guest Strike count x10
45	Guest Strike count x1
46	Guest Total Pitch count x100
47	Guest Total Pitch count x10
48	Guest Total Pitch count x1
49	Guest Strike Out count x100
50	Guest Strike Out count x10
51	Guest Strike Out count x1

Frame Number and Pitch Types

The frame number sent with each RTD frame also represents the pitch type (for manual mode). The pitch types for each frame number are shown below. Standard RTD Port configuration: 1,200 Baud Rate, 8 Data Bits, and No Parity for the Jugs or Stalker Sport gun type. Use a Baud Rate of 9600 for the Stalker Pro gun.

Frame #	Pitch Type
1	Curve Ball
2	Slider
3	Sinker
4	Change Up
5	Knuckle Ball
6	Fast Ball
7	Split Finger
8	Screw Ball
9	Breaking Ball
10	(Blank)
11	Other
12	User 1
13	Off Speed
14	User 2
15	User 3
16	Fork Ball
17	User 4
18	Palm Ball
19	Home Pitch Count
20	Guest Pitch Count

Section 6: Clock Console Operation

Sport Insert 0G-136301

The Sport Insert drawing is located at the end of this section. The **Quick Reference** is located in **Appendix D**.

Reference Drawings:

Insert, Clock Console.....**Drawing A-136301**

Refer to the information in **Section 2** to start up the console and use the sport insert. Read **Section 2** carefully to fully understand the following operation instructions.

If an insert is lost or damaged, a copy of the insert drawing located at the end of this section can be used until a replacement can be ordered.

6.1 Clock Console Codes

The clock console is used to keep clock and timer information for basketball and football codes. The code numbers are listed below.

CODE:

1000 - Basketball Main Clock and Shot Clock
6000 - Football Main Clock and Shot Clock

6.2 Clock Console Keys

Timer Start
<TIMER START> starts the Shot Clock or Play Clock timer.

Note: This function may also be implemented with a remote start/stop switch connected to J7.

Timer Stop
<TIMER STOP> stops the Shot Clock or Play Clock timer

Note: This function may also be implemented with a remote start/stop switch connected to J7.

Set Timer Time

LCD Display	Action
PLAY CLOCK CURR – MM:SS MM:SS = current setting	**<SET TIMER TIME>** sets the current time displayed on the shot clock or play clock timer.

Set Reset Time 1

LCD Display	Action
PLAY CLOCK RESET 1 – MM:SS MM:SS = current setting	**<SET RESET TIME 1>** sets the current Reset 1 value for the shot clock or play clock timer.

Set Reset Time 2

LCD Display	Action
PLAY CLOCK RESET 2 – MM:SS MM:SS = current setting	**<SET RESET TIME 2>** sets the current Reset 2 value for the shot clock or play clock timer.

Timer Reset 1
<TIMER RESET 1> Resets the play clock or shot clock to the Reset 1 value.

Note: This function may also be implemented with a remote start/stop reset switch connected to J7.

Timer Reset 2
<TIMER RESET 2> Resets the play clock or shot clock to the Reset 2 value.

Note: This function may also be implemented with a remote start/stop reset switch connected to J7.

6.3 Menu

The **<MENU>** key allows the user to select from a list of options specific for each sport. The up and down arrow keys allow the user to scroll through the menu list. Pressing a key other than **<YES>**, **<NO>**, the arrow keys and other allowed keys, exits the Menu function.

Refer to **Section 7** for the Basketball Menu Key functions.
Refer to **Section 8** for the Football Menu Key functions.

6.4 Settings

Refer to **Section 7** for Basketball Settings.
Refer to **Section 8** for Football Settings.

Note: Only settings that apply to the operation of the main clock or shot/play clocks will affect the operation of the clock console.

Section 7: Basketball Operations

Sport Insert: LL-2433

The Sport Insert drawing is located at the end of this section.
The Team Name insert and Block Diagram drawings are located in **Appendix A**.
The **Quick Reference** is located in **Appendix D**.

Reference Drawings:

Insert, Basketball.....**Drawing A-120121**
Block Diagrams, A/S5000/3000, BB, VB & WR #1.....**Drawing A-124686**
Block Diagrams, A/S5000/3000, BB, VB & WR #3.....**Drawing A-124688**
Insert, Team Name .....**Drawing A-125290**
Block Diagrams, A/S5000/3000, BB, VB & WR #2.....**Drawing A-125415**

Refer to the information in **Section 2** to start up the console and use the sport insert. Read **Section 2** carefully to fully understand the following operation instructions.

If an insert is lost or damaged, a copy of the insert drawing located at the end of this section can be used until a replacement can be ordered.

Use the labels provided in **Appendix B** to attach the correct code number label to the sport insert in the appropriate location. Write the code number in the space provided below.

Write the correct code number here.

If you do not know the code number to enter for your scoreboard, refer to **Appendix B** in this manual. If you do not know the model number of your scoreboard, refer to the **Installation and Maintenance** manual provided with the scoreboard.

1.1 Basketball Keys

Set Shot Time

LCD Display	Action
SHOT CLOCK-EDIT CURRENT MM:SS* MM:SS = minutes, seconds	Press <**SET SHOT TIME**> to display the configured shot clock time length. To accept the shot clock time length press <**YES**>. To decline the selection of the shot clock time length press <**NO**>. To change the shot clock time length and set the shot clock enter the new time in minutes and seconds on the number pad and press <**ENTER**>. Press <**CLEAR**> twice to clear changes and return to the game.
SHOT CLOCK-EDIT RESET 1 MM:SS* MM:SS = minutes, seconds	Press <**SET SHOT TIME**> a second time to display the configured time for shot clock **Reset 1** length. To accept the shot clock **Reset 1** length press <**YES**>. To decline the selection of the shot clock **Reset 1** length, press <**NO**>. To change the shot clock **Reset 1** length and set the shot clock enter the new time in minutes and seconds on the number pad and press <**ENTER**>. Press <**CLEAR**> twice to clear changes and return to the game. **Note:** The configured time of shot clock is set using the **EDIT SETTINGS** function when a new code is selected.

(Continued on next page)

*(Continued on **previous** page)*

LCD Display	Action
SHOT CLOCK-EDIT RESET 2 MM:SS* MM:SS = minutes, seconds	Press <**SET SHOT TIME**> a second time to display the configured time for shot clock **Reset 2** length. To accept the shot clock **Reset 2** length press <**YES**>. To decline the selection of the shot clock **Reset 2** length press <**NO**>. To change the shot clock **Reset 2** length and set the shot clock enter the new time in minutes and seconds on the number pad and press <**ENTER**>. Press <**CLEAR**> twice to clear changes and return to the game. **Note:** The configured time of shot clock is set using the **EDIT SETTINGS** function when a new code is selected.

Recall Shot Time

LCD Display	Action
SHOT CLOCK -MODE RECALL Y/N	Press <**RECALL SHOT TIME**> to recall the shot time that was remaining before the last shot clock reset was pressed. To accept the recall press <**YES**>. To decline the recall press <**NO**>.

Time Out On/Off

<TIME OUT ON/OFF> stops and starts the time out clock. The length of both the full and partial time outs can also be changed when the time out clock is stopped.

Note 1: Only the time outs configured in the **EDIT SETTINGS** function are displayed on the LCD and available for selection (please refer to the table on the following page).

Note 2: The up and down arrow keys can also be used to select the full and partial time outs.

LCD Display	Action
TIME OUTS-SELECT FULL MM:SS MM:SS = minutes, seconds	Press <**TIME OUT ON/OFF**> to display the configured time for full time out length. To accept the full time out length press <**YES**>. To decline the selection of the full time out length press <**NO**>. To change the full time out length enter the new length in minutes and seconds on the number pad and press <**ENTER**>. Press <**CLEAR**> twice to clear changes and return to the game.
TIME OUT-SELECT PARTIAL MM:SS MM:SS = minutes, seconds	Press <**TIME OUT ON/OFF**> a second time to display the configured time for partial time out length. To accept the partial time out length press <**YES**>. To decline the selection of the partial time out length press <**NO**>. To change the partial time out length enter the new length in minutes and seconds on the number pad and press <**ENTER**>. Press **<CLEAR>** twice to clear changes and return to the game.

Blank Player Foul

Blanks the digits of the Player-Foul field of the scoreboard.

Period +1

LCD Display	Action
PERIOD-+1 N N = current setting	Press <**PERIOD +1**> to increment the period number. The full and partial time outs and team fouls are automatically reset at halftime.

Time Out

The home and guest **<TIME OUT>** keys are used to decrement the number of time outs remaining and start the time out clock. The scoreboard indicator is turned on when the type of time out is selected (full or partial). The scoreboard indicator is turned off when the time out clock expires or is stopped.

Note 1: Only the types (full or partial) of time outs that were configured in the **EDIT SETTINGS** function are displayed on the LCD and available for selection.

Note 2: The up and down arrow keys can also be used to select the full and partial time outs.

LCD Display	Action
TIME OUT-HOME FULL N N = current setting	Press <**TIME OUT**> to display the number of full time outs remaining. To accept the full time out and start the time out clock press <**YES**>. Full time out decrements. To decline the selection of a full time out press <**NO**>. Full time out does not decrement. **Note:** The up and down arrow keys can also be used to select the full and partial time outs.
TIME OUT-HOME PARTIAL N N = current setting	Press <**TIME OUT**> a second time to display the number of partial time outs remaining. To accept the partial time out and start the time out clock press <**YES**>. Partial time out decrements. To decline the selection of a partial time out press <**NO**>. Partial time out does not decrement. **Note:** The up and down arrow keys can also be used to select the full and partial time outs.
TIME OUT-HOME NO TIME OUTS	This message appears when there are no time outs left.

Score +1, +2, +3, -1

The home and guest **<SCORE +1>**, **<SCORE +2>** and **<SCORE +3>** keys are used to increment the team score and the **<SCORE -1>** key is used to decrement the team score.

LCD Display	Action
TEAM SCORE-+1 HOME NNN *NNN* = current setting	Press the appropriate score key to increment or decrement the score for the home or guest team. The LCD shows which key was pressed and the new value for the team score of the corresponding team.
TEAM SCORE-+1 HOME PLAYER NN* *NN* = current setting	If the program is configured to update the player points, this prompt displays asking for a player number. Enter the jersey number of the player who scored the points and press <**ENTER**>.
HOME PLAYER NN NOT FOUND, ADD? *NN* = current setting	If the player is not in the roster, this prompt asks if the player should be added. Press <**YES**> to add the player to the roster and credit the points to that player. Press <**NO**> to decline the entry of the player number.
HOME PLAYER NN ROSTER FULL *NN* = current setting	This message displays when the answer to the previous prompt is **YES** and the roster is full.
HOME PLAYER NN POINTS NN *NN* = current setting	The player's number and number of points display if the player was found in the game or correctly added to the roster.

Team Fouls +1

LCD Display	Action
TEAM FOULS-+1 HOME NN NN = current setting	Press the home or guest <**TEAM FOULS +1**> key to increment the number of team fouls for the corresponding team. The number of team fouls stop incrementing at the number of fouls configured for the 1-on-1 or 2-shot bonus.
TEAM FOULS-+1 HOME PLAYER NN* NN = current setting	If the program is configured to update the player fouls, this prompt displays asking for a player number. Enter the jersey number of the player who made the foul and press <**ENTER**>.
HOME PLAYER NN NOT FOUND, ADD? NN = current setting	If the player is not in the roster, this prompt asks if the player should be added. Press <**YES**> to add the player to the roster and credit the foul to that player. Press <**NO**> to decline the entry of the player number.
HOME PLAYER NN ROSTER FULL NN = current setting	This message displays when the answer to the previous prompt is **YES** and the roster is full.
HOME PLAYER NN FOULS N NN, N = current setting	The player's number and the number of fouls display if the player was found in the game or correctly added to the roster. **Note:** If a player number is not entered the fouls will not be displayed.

Bonus

Note: Only the types of bonuses that were configured in the **EDIT SETTINGS** function are displayed on the LCD and available for selection.

LCD Display	Action
HOME BONUS 1-ON-1	Press the home or guest <**BONUS**> key to turn on the 1-on-1 bonus indicator for that team.
HOME BONUS 2-SHOT	Press the home or guest <**BONUS**> key a second time to turn on the 2 shot bonus indicator for that team.
HOME BONUS OFF	Press the <**BONUS**> key a third time to turn off both indicators.

Possession

LCD Display	Action
HOME POSSESSION ON	Press the home or guest <**POSS**> key to turn on the possession indicator for that team.
HOME POSSESSION OFF	To turn off the possession indicator press the same <**POSS**> key a second time or press the opposite <**POSS**> key.

In Game/Out of Game

The **<IN GAME>** and **<OUT OF GAME>** keys are only functional when the Home or Guest **<PLAYER>** key has been pressed. Refer to **Subsection Player**.

Delete Player

The **<DELETE PLAYER>** key is only functional when the Home or Guest **<PLAYER>** key has been pressed. Refer to **Subsection Player**.

Player

Note: If player stats are being received from DSTI the keys PLAYER, IND SUB and MASS SUB will be disabled. The LCD will display the messages shown below when these keys are pressed.

LCD Display	Action
STATS RECEIVED KEY DISABLED EXIT STATS MODE Y/N?	The key disabled message will display for one second and then the <**EXIT STATS**> message will display and wait for a <**YES**> or <**NO**> key. If the <**YES**> key is pressed then stats data will be saved in the console and the console will <**EXIT STATS**> mode until another stats packet is received. This will allow the operator to enter player stats from the console if the DSTI feed is lost.

LCD Display	Action
HOME PLAYER NN*	When the home or guest <**PLAYER**> key is pressed, this prompt asks the jersey number of the player to be edited. Enter the jersey number on the number pad and press <**ENTER**>.
NN = current setting	
HOME PLAYER NN NOT FOUND, ADD?	If the player is not in the roster, this prompt asks if the player should be added. Press <**YES**> to add the player to the roster. Press <**NO**> to decline the entry of the player number.
NN, DD = current settings	
HOME PLAYER NN ROSTER FULL	This message displays when the answer to the previous prompt is **YES** and the roster is full.
NN = current setting	

(Continued on next page)

*(Continued from **previous** page)*

LCD Display	Action
HOME PLAYER NN S-I F-N* P-NN NN = player number S-I = **in** game S-O = **out** of game F-N = number of **fouls** P-NN = number of **points**	If the player is found, the player's game status and statistics can be changed. **To change a player's statistics:** **1.** Use the up and down arrow keys to select the player from the list. **2.** Use the left and right arrow keys to select the statistic to be changed. **3.** Enter the correct number for the selected statistic on the number pad and press <**ENTER**>. **To change a player's game status:** **1.** Use the up and down arrow keys to select the player from the list. **2.** Press <**IN GAME**> or <**OUT OF GAME**>. **3.** The S field on the display changes to show the player's current status. Press <**CLEAR**> to exit the menu and return to the game.
HOME PLAYER NN DELETE PLAYER?	To delete an incorrect player from the roster use the up and down arrow keys to select the player from the list and press <**DELETE PLAYER**>. Press <**YES**> to remove the player from the roster. Press <**NO**> or <**CLEAR**> to decline the deletion process and return to the game.

Individual Substitution

LCD Display	Action
IND SUB-HOME NN* IN FOR NN* NN = current setting	When the home or guest <**INDIV. SUB.**> key is pressed, this prompt asks the jersey number of the player entering and leaving the game. Enter the jersey number of the player entering the game on the number pad and press <**ENTER**>. Enter the jersey number of the player leaving the game on the number pad and press <**ENTER**>.
IND SUB-HOME SUB OK	This message is displayed if no errors are found.
IND SUB-HOME SUB NOT MADE	This message is displayed for the following reasons: The player going into the game is already marked as in the game. The player coming out of the game is not marked as in the game.
IND SUB-HOME NOT FOUND NN NN = current setting	This message is displayed if the player going in or the player coming out of the game is not found in the roster. Press <**YES**> to correct the jersey number. Enter the correct jersey number and press <**ENTER**>.

Mass Substitution

LCD Display	Action
MASS SUB-HOME PLAYER 1 NN* NN = current setting	After the home or guest <**MASS SUB.**> key is pressed the LCD will display a message on the LCD asking for the first of five player numbers that are going into the game. Enter the jersey number on the number pad and press <**ENTER**> for each of the five players. Press <**CLEAR**> at any time to exit the Mass Substitution function. When the home or guest <**MASS SUB**> key is pressed, this prompt asks the jersey number of the first player entering the game. Enter the jersey number of the each of the five players entering the game on the number pad and press <**ENTER**>.
MASS SUB-HOME SUB OK	This message is displayed if no errors are found.
MASS SUB-HOME DUPLICATE NN NN = current setting	This message displays for each duplicate jersey number found for the five players going into the game. Press <**YES**> to correct the jersey number. Enter the correct jersey number and press <**ENTER**>.
NOT FOUND,ADD? PLAYER 1 NN NN = current setting	This message displays for each player not found in the roster. Press <**YES**> to add the jersey number. Press <**NO**> to ignore and select another jersey number. Enter the correct jersey number and press <**ENTER**>.

7.1 Edit

The **<EDIT>** key allows the user to select and edit the following scoreboard fields. Press **<EDIT>** and the key for the home or guest field to be edited.

Time Out
Note 1: Only the time outs configured in the **EDIT SETTINGS** function are displayed on the LCD and available for selection.

Note 2: The up and down arrow keys can also be used to select the full and partial time outs.

LCD Display	Action
TIME OUT-HOME FULL N* *N* = current setting	Press <**EDIT**> <**TIME OUT**> for the home or guest team to display the current setting of full time outs remaining. Enter the correct number of full time outs on the number pad and press <**ENTER**>.
TIME OUT-HOME PARTIAL N* *N* = current setting	Press <**EDIT**> <**TIME OUT**> for the home or guest team a second time or the down arrow key to display the current setting of full time outs remaining. Enter the correct number of partial time outs on the number pad and press <**ENTER**>.

Score +1, +2, +3, -1

LCD Display	Action
TEAM SCORE-EDIT HOME NNN* *NN* = current setting	Press <**EDIT**> and any of the **SCORE** keys for the home or guest team to display the current team score setting. Enter the correct team score on the number pad and press <**ENTER**>.

Team Fouls +1

LCD Display	Action
TEAM FOULS-EDIT HOME NN* NN = current setting	Press <**EDIT**> <**TEAM FOULS**> for the home or guest team to display the current team foul setting. Enter the correct number of team fouls on the number pad and press <**ENTER**>.

Period +1

LCD Display	Action
PERIOD-EDIT N* N = current setting	Press <**EDIT**> <**PERIOD+1**> for the home or guest team to display the period setting. Enter the correct period number on the number pad and press <**ENTER**>.

Time Out On/Off

LCD Display	Action
TIME OUTS-EDIT FULL MM:SS MM:SS = minutes, seconds	Press <**EDIT**> <**TIME OUT ON/OFF**> to display the current time setting for full time outs. Enter the correct time on the number pad and press <**ENTER**>.
TIME OUT- EDIT PARTIAL MM:SS MM:SS = minutes, seconds	Press <**TIME OUT ON/OFF**> a second time or the down arrow key to display the configured time for partial time out length. Enter the correct time on the number pad and press <**ENTER**>.

7.2 Menu

The **<MENU>** key allows the user to select from a list of options specific for each sport. The up and down arrow keys allow the user to scroll through the menu list. Pressing a key other than **<YES>**, **<NO>**, the arrow keys, and other allowed keys, exit the Menu function.

The **MENU** function should be used at the beginning of each new game to edit the Home and Guest Rosters.

New Game

LCD Display	Action
MENU-MAIN NEW GAME?	Press <**YES**> to clear all of the program data for the last game played or the game in progress and begin running the selected sport. Press <**NO**> to resume the game in progress using the current data and exit the Menu. Press the down arrow key to scroll to the next selection.

New Code

LCD Display	Action
MENU-MAIN NEW CODE?	Press <**YES**> to begin selection of a new code from the ENTER CODE prompt. Press <**NO**> to resume the game in progress using the current data and exit the Menu. Press the down arrow key to scroll to the next selection.

Home Roster, Guest Roster

Home Roster and **Guest Roster** are entered in the same way. **Home Roster** is used as an example.

LCD Display	Action
MENU-ROSTER SELECT HOME	Press <**YES**> or the right or left arrow key to select the Home or Guest Roster submenu and show the first prompt on the LCD. Press <**NO**> to resume the game in progress using the current data and exit the Menu. Press the down arrow key to scroll to the next selection.
HOME-TEAM NAME AAAAAAAAAAAAA*	**The TEAM NAME (LL-2441) insert must be inserted to enter the Team Name Message Center (TNMC) settings.** The TNMC is updated after each selection is completed. Use the **COLUMNS, ROWS** and **STROKE** keys to select the **WIDTH, HEIGHT** and **FONT** of the TNMC. The defaults are 48 columns, 8 rows and single stroke. Enter up to fifteen (15) characters for the team name and press <**ENTER**>. **Insert the BASKETBALL (LL-2433) insert to continue.**
HOME-TEAM ABBR AAAAAAAAAA*	**The TEAM NAME (LL-2441) insert must be inserted to enter the Team Name Message Center (TNMC) settings.** The TNMC is updated after each selection is completed. Use the **COLUMNS, ROWS** and **STROKE** keys to select the **WIDTH, HEIGHT** and **FONT** of the TNMC. The defaults are 48 columns, 8 rows and single stroke. Enter up to ten (10) characters for the team abbreviation and press <**ENTER**>. **Insert the BASKETBALL (LL-2433) insert to continue.**

LCD Display	Action
MENU-HOME EDIT PLAYERS?	Press <**YES**> to assign the jersey numbers for all the players in the roster. Press <**NO**> or the left arrow key to exit the submenu and return to the Main menu.
MENU-HOME PLAYER 01 NN* NN = current setting	Enter the jersey number for that player from the official roster and press <**ENTER**>. The next player is shown on the LCD. Continue entering the jersey numbers for up to 15 players. Press the <**CLEAR**> key to advance to the next option.
MENU-HOME CLEAR STATS?	This function clears all game statistics and should only be used before the start of a game. Press <**YES**> to clear the in-game status fouls, and points for all players in the home roster. Press <**NO**> to decline the selection. Press the down arrow key to scroll to the next selection.

Display Menu

The **DISPLAY MENU** allows the user to start and edit the segment timer or to change the brightness of the scoreboard.

LCD Display	Action
MENU-MAIN ENTER DISPLAY MENU?	Press <**YES**> to select the Display submenu and show the first prompt on the LCD. Press the down arrow key to scroll to the next selection.

(Continued on next page)

(Continued from previous page)

LCD Display	Action
MENU-DISPLAY RUN SEG TIMER Y/N	**Note:** The segment timer function is disabled while the clock is running. Press <**YES**> to exit the sport code and run the segment timer program. Press <**NO**> or the down arrow key to scroll to the next selection.
EXIT GAME ARE YOU SURE Y/N	This prompt confirms that the user wants to exit the sport code and enter the segment timer **The SEGMENT TIMER (LL-2475) insert must be inserted to enter the Segment Timer settings.** Refer to **Section 3** for more information on the Segment Timer. Press <**YES**> to exit the sport code and run the segment timer program. Press <**NO**> or the down arrow key to scroll to the next selection.
MENU- DIMMING LEVEL (0-9): NN% NN = current level NONE = bright <**0**> 90% = <**1**> 80% = <**2**> 70% = <**3**> 60% = <**4**> 50% = <**5**> 40% = <**6**> 30% = <**7**> 20% = <**8**> 10% = <**9**>	Press <**0**> through <**9**> or use the arrow keys <🡐> <🡒> to select the intensity for the digits on the scoreboard. Press <**NO**> to resume the game in progress using the current data, and exit the Menu. Press the down arrow key <🡓> to scroll to the next selection. **Note:** Dim levels pertain to outdoor LED products. Indoor LED and incandescent products only support one level of dimming at 50%.

Edit Settings

LCD Display	Action
MENU-MAIN EDIT SETTINGS?	Press <**YES**> or the right or left arrow key to select the Settings submenu and show the first prompt on the LCD. Press <**NO**> to resume the game in progress using the current data and exit the Menu. Press the down arrow key to scroll to the next selection.

Time of Day

LCD Display	Action
MENU-MAIN SELECT TOD?	Press <**YES**> or the right arrow key to select the Time of Day submenu and show the first prompt on the LCD. Press <**NO**> to resume the game in progress using the current data and exit the menu.
MENU-TIME OF DAY 1*12, 2-24 HOUR	Press <**1**> or <**2**> to display the time of day in 12 hour (default) or 24 hour format. Press <**ENTER**> or the down arrow key to scroll to the next selection.
MENU-TIME OF DAY TOD HH:MM:SS* HH:MM:SS = current setting	Enter the time of day in hours, minutes and seconds using the selected format on the number pad and press <**ENTER**>. Press <**ENTER**> or the down arrow key to scroll to the next selection.

(Continued on next page)

(Continued from previous page)

LCD Display	Action
MENU-TIME OF DAY 1*GAME 2-TOD * = current setting	Press <**1**> or <**2**> to display the game clock (default) or the time of day clock on the scoreboard. Press the down arrow key to exit the Menu and return to the game.
MENU-TIME OF DAY BLANK GAME DATA?	If 2-TOD is selected this message will be displayed. Press <**ENTER**> to blank all game data on the scoreboard except for the Time of Day digits.

7.3 Settings

The user can edit the following settings when **EDIT SETTINGS** has been selected from the Main Menu.

Number of Periods

LCD Display	Action
NO. OF PERIODS=N 2 OR 4? N = current setting	The No. of Periods indicates whether the game consists of two halves or four quarters Press <**2**> or <**4**> on the number pad to choose the desired number of periods.

Main Clock

Note 1: The settings entered for **Main Clock** are used with the **<SET MAIN CLOCK>** key.

Note 2: The period, break and overtime lengths are used differently depending on the direction of the main clock. For count down, the main clock is set to the selected length, decrements towards zero, and stops at zero. For count up, the main clock is set to zero, increments towards the selected length, and stops when the selected length is reached.

LCD Display	Action
MAIN CLOCK-MODE TENTH SECOND? N *N* = current setting	When the main clock is set to count down and tenths of a second is selected, the main clock displays in tenths of a second remaining when the time is below one minute. Press <**YES**> to set the main clock to display tenths of a second. Press <**NO**> to display whole seconds.
MAIN CLOCK-TIME PERIOD MM:SS *MM:SS* = current setting	Enter the correct amount of time per period in minutes and seconds on the number pad and press <**ENTER**>. For example, 20:00 per half or 8:00 per quarter **Note:** Pressing <**ENTER**> to select the period time as the main clock setting will increment the current period number if the clock value was previously zero.
MAIN CLOCK-TIME BREAK MM:SS *MM:SS* = current setting	Set the amount of time between periods. Enter the correct amount of time for break length in minutes and seconds on the number pad and press <**ENTER**>. For example, 1:00
MAIN CLOCK-TIME OVERTIME MM:SS *MM:SS* = current setting	Set the amount of time for the overtime periods. Enter the correct amount of time for overtime periods in minutes and seconds on the number pad and press <**ENTER**>. For example, 5:00

Shot Clock

LCD Display	Action
MAIN CLOCK-TIME RESET MM:SS* MM:SS = current setting	This setting is used for the <**RESET>** button on the remote shot clock control console. **Note:** The current setting for the <**RESET>** time displays on the LCD until the first number key is pressed. Enter the correct amount of reset time in minutes and seconds on the number pad and press <**ENTER**>. For example, 00:45
SHOT CLOCK-MODE SYNC W/ MAIN?	Press <**YES**> to synchronize the shot clock with the main clock. If <**STOP**> for the main clock is pressed while the main and shot clocks are running, the shot clock stops. The shot clock restarts when <**START**> is pressed for the main clock. Press <**NO**> to allow the shot clock to run independently of the main clock. The shot clock starts and stops only with the switch on the remote shot clock control console.
SHOT CLOCK-MODE AUTO BLANK?	Press **<YES**> to blank the shot clock time when the shot clock time is greater than or equal to the main clock time. The shot clock is reset and stopped when the display is blanked to eliminate inadvertent sounding of shot clock horn. Press <**NO**> to display the shot clock time at all times.

Time Outs

Note 1: If a full or partial time out is not needed for the HOME or GUEST **<TIME OUT>** keys, enter zero for the number of time outs.

Note 2: If a full or partial time out is not needed for **<TIME OUT ON/OFF>**, enter zero for the time.

Note 3: The number for each type of time out must be manually entered for an overtime period using the **<EDIT> <TIME OUT>** key sequence for each team.

LCD Display	Action
TIME OUTS-MODE FULL N* N = current setting	Enter the number of full time outs on the number pad and press <**ENTER**>.
TIME OUTS-TIME FULL MM:SS* MM:SS = current setting	Enter the amount of time for a full time out in minutes and seconds on the number pad and press <**ENTER**>. For example, 1:00
TIME OUTS-MODE WARNING MM:SS* MM:SS = current setting	A warning horn can be configured to signal the end of a full/partial time out. While the time out clock is counting down, the horn will sound for one second when the warning time is reached. Enter a zero for the time to disable the warning horn. Enter the time in minutes and seconds on the number pad and press <**ENTER**>.

(Continued on next page)

*(Continued from **previous** page)*

LCD Display	Action
TIME OUTS-MODE PARTIAL N* N = current setting	Enter the number of partial time outs on the number pad and press <**ENTER**>.
TIME OUTS-TIME PARTIAL MM:SS* MM:SS = current setting	Enter the amount of time for a partial time out in minutes and seconds on the number pad and press <**ENTER**>. For example, 00:20
TIME OUTS-MODE SHOW ON MAIN? N N = current setting	Press <**YES**> to display the time out time on the LCD and the main clock digits of the scoreboard while the time out clock is active. Press <**NO**> to display the time out time on the LCD only.

Team Score

LCD Display	Action
TEAM SCORE-MODE UPDATE PLAYER?	This feature must be enabled for all player-foul-points panels. Press <**YES**> to allow entry of a player number after the home or guest team score are incremented or decremented. Press <**NO**> to prevent entry of a player number.

Team Fouls

LCD Display	Action
TEAM FOULS-MODE UPDATE PLAYER?	This feature must be enabled for all player-foul-points panels. Press <**YES**> to allow entry of a player number after the home or guest team fouls are incremented or decremented. Press <**NO**> to prevent entry of a player number.
TEAM FOULS-MODE 1-ON-1 BONUS NN* NN = current setting	Enter the number of team fouls permitted before the 1-on-1 bonus applies on the number pad and press <**ENTER**>. The home and guest team fouls stop incrementing at this number unless the 2-shot bonus is enabled. Enter zero to disable this feature.
TEAM FOULS-MODE 2-SHOT BONUS NN* NN = current setting	Enter the number of team fouls permitted before the 2-shot bonus applies on the number pad and press <**ENTER**>. Enter zero to disable this feature.

Select Captions

LCD Display	Action
SELECT CAPTIONS ON 1 ← → 2 OFF	This menu option allows for the controlled backlit captions to be turned ON/OFF. Press the <**1**> key to select ON and OFF for captions controlled by control #1. Press the <**2**> key to select ON and OFF for captions controlled by control #2.

Select Team Foul Display

LCD Display	Action
TEAM FOULS SHOW ON STATS? Y	This menu option allows the selection of showing team fouls on line 6 of the player stats panel. To accept display of team fouls, press <**YES**>. To decline display of team fouls, press <**NO**>.

Score by Quarter

LCD Display	Action
SCORE BY QUARTER Y/N? X *X* = current setting	This feature allows for scores to be recorded by quarter. This data is available on the RTD output. Press <**YES**> to score by quarter or press <**NO**> to not score by quarter. **Note:** If this feature is enabled, all scores are edited by quarter. Use this function only when needed.

Switch Output

The All Sport 5000 series console has a switch that can be used to drive a number of different devices. The switch can be configured to operate under different settings. The default setting is 1-CLOCK= 0.

To display the switch setting that you want to select:

- Press the number (0,1,2,3) key as a shortcut or use the left and right arrow keys to scroll to the desired setting.
- Press **<YES>** to select the new setting.
- Press **<NO>** or the down arrow key to leave the switch setting and display the next prompt.

The possible settings for the switch output are as follows:

Setting	Result
0 - DISABLED SWITCH OUTPUT=N 0-DISABLED? N = current setting	The switch remains open at all times and any external devices are disabled.
1-CLOCK = 0 SWITCH OUTPUT=N 1-CLOCK =0? N = current setting	In count down mode, the switch closes when the main clock reaches zero and remains closed until a nonzero value is entered. In count up mode, the switch closes when the main clock reaches the proper period, break, or overtime length and opens when any other value is entered.
2-CLOCK STOP SWITCH OUTPUT=N 2-CLOCK STOP? N = current setting	The switch closes when the main clock is stopped and opens when the main clock is running. External devices are disabled when the main clock is running.
3-MAIN HORN SWITCH OUTPUT=N 3-MAIN HORN? N = current setting	The switch closes when the main horn sounds. This could be when Auto Horn is enabled and the main clock reaches zero or when <**HORN**> is pressed.

Default Settings

Write the settings for this installation in the space (Custom) provided.

Setting	Default	Custom 1	Custom 2	Custom 3
Number of Periods	4			
Tenth of a Second	Yes			
Period Length	8:00			
Break Length	10:00			
Overtime Length	5:00			
Shot Clock Reset	0:45			
Shot Clock Sync with	Yes			
Shot Clock Auto Blank	Yes			
Full Time Outs	3			
Full Time Out	1:00			
Partial Time Outs	2			
Partial Time Out	00:20			
Update Player Score	No			
Update Player Fouls	Yes			
1-on-1 Bonus	5			
2-Shot Bonus	0			
Switch Output	1-Clock = 0			

Section 8: Football Operations

Sport Insert: LL-2437

The Sport Insert drawing is located at the end of this section. The Team Name insert and Block Diagram drawings are located in **Appendix A**. The **Quick Reference** is located in **Appendix D**.

Reference Drawings:

Insert, Football .....**Drawing A-122652**
Block Diagrams, A/S5000/3000, Outdoor Sports .....**Drawing A-124690**
Insert, Team Name .....**Drawing A-125290**

Refer to the information in **Section 2** to start up the console and use the sport insert. Read **Section 2** carefully to fully understand the following operation instructions.

If an insert is lost or damaged, a copy of the insert drawing located at the end of this section can be used until a replacement can be ordered.

Use the labels provided in **Appendix B** to attach the correct code number label to the sport insert in the appropriate location. Write the code number in the space provided below.

Write the correct code number here.

If you do not know the code number to enter for your scoreboard, refer to **Appendix B** in this manual. If you do not know the model number of your scoreboard, refer to the **Installation and Maintenance** manual provided with the scoreboard.

8.1 Football Keys

Time Out On/Off
<TIME OUT ON/OFF> stops and starts the time out clock. The length of both the full and partial time outs can also be changed when the time out clock is stopped.

Note 1: Only the time outs configured in the **EDIT SETTINGS** function are displayed on the LCD and available for selection (please refer to the table on the following page).

Note 2: The up and down arrow keys can also be used to select the full and partial time outs.

LCD Display	Action
TIME OUT-SELECT FULL MM:SS MM:SS = minutes, seconds	Press **<TIME OUT ON/OFF>** to display the configured time for full time out length. To accept the full time out length, press **<YES>**. To decline the selection of the full time out length, press **<NO>.** To change the full time out length, enter the new length in minutes and seconds on the number pad and press **<ENTER>**. Press **<CLEAR>** twice to clear changes and return to the game.
TIME OUT-SELECT PARTIAL MM:SS MM:SS = minutes, seconds	Press **<TIME OUT ON/OFF>** a second time to display the configured time for partial time out length. To accept the partial time out length, press **<YES>**. To decline the selection of the partial time out length, press **<NO>.** To change the partial time out length, enter the new length in minutes and seconds on the number pad and press **<ENTER>**. Press **<CLEAR>** twice to clear changes and return to the game.

Set Play Clock

The **PLAY CLOCK** setting is used by the remote play clock console. The configured play clock times are set using the **EDIT SETTINGS** function when a new code is selected.

Note 1: When **RESET ON STOP** is set to yes (Y) the **STOP** switch automatically resets the play clock using the **RESET 1** time and the **RESET** button uses the **RESET 2** time.

Note 2: When **RESET ON STOP** is set to no (N) the **STOP** switch does not reset the play clock and the **RESET** button uses the **RESET 1** time (please refer to the table on the following page).

LCD Display	Action
PLAY CLOCK-EDIT CURR MM:SS MM:SS = minutes, seconds	Press **<SET PLAY CLOCK>** to display the configured time for overtime length. To accept the play clock time length, press **<YES>**. To decline the selection of the play clock time length, press **<NO>.** To change the play clock time length and set the play clock, enter the new time in minutes and seconds on the number pad and press **<ENTER>**. Press **<CLEAR>** twice to clear changes and return to the game.
PLAY CLOCK-EDIT RESET 1 MM:SS MM:SS = minutes, seconds	Press **<SET PLAY CLOCK>** a second time to display the configured time for overtime length. To accept the play clock reset 1 length, press **<YES>**. To decline the selection of the play clock, reset 1 length press **<NO>.** To change the play clock reset 1 length and set the play clock, enter the new time in minutes and seconds on the number pad and press **<ENTER>**. Press **<CLEAR>** twice to clear changes and return to the game.

(Continued on next page)

(Continued from previous page)

LCD Display	Action
PLAY CLOCK-EDIT RESET 2 MM:SS MM:SS = minutes, seconds	Press **<SET PLAY CLOCK>** a second time to display the configured time for overtime length. To accept the play clock reset 2 length, press **<YES>**. To decline the selection of the play clock reset 2 length, press **<NO>.** To change the play clock reset 2 length and set the play clock, enter the new time in minutes and seconds on the number pad and press **<ENTER>**. Press **<CLEAR>** twice to clear changes and return to the game.

Recall Last Down

The **<RECALL LAST DOWN>** key is used to re-display the Ball On, Down, To Go, and Possession values of the previous play if a new value has been incorrectly entered. If Auto Calculate is off, this function is disabled.

When the LCD Display is as shown, the following actions may be selected.

LCD Display	Action
LAST DOWN RECALL Y/N	Press **<RECALL LAST DOWN>** to redisplay the Ball On, Down, To Go, and Possession values of the previous play. If Auto Calculate is off, this function is disabled. Press **<YES>** to use the previous values. Press **<NO>** to use the values that were just entered.

Quarter +1

LCD Display	Action
QUARTER-+1 N *N* = current setting	Press **<QUARTER +1>** to increment the quarter number. The full time outs are automatically reset at halftime.
QUARTER-SWAP → N Y/N *NN* = current setting	When the quarter number increments to 2 or 4 the **PLAY DIRECTION** can be changed. Press **<YES>** to change **PLAY DIRECTION**. Press **<NO>** to leave **PLAY DIRECTION** the same.

Yards To Go

The **<BALL ON>** key is used to manually enter the field position (yard line) of the ball.

LCD Display	Action
TO GO EDIT NN* *NN* = current setting	Enter the number of yards to go for a first down and press <**ENTER**>. Press **<CLEAR>** twice to clear changes and return to the game.

Down +1

LCD Display	Action
DOWN +1 N *N* = current setting	Press <**DOWN +1**> to manually increment the down number. A prompt showing down number displays briefly.

Ball On

The **<BALL ON>** key is used to manually enter the field position (yard line) of the ball. If Auto Calculate is on, **SIDE OF FIELD** must be selected first.

LCD Display	Action
BALL ON NN* NN = current setting	If Auto Calculate is on, **SIDE OF FIELD** must be selected first. Enter the field position (yard line) of the ball and press <**ENTER**>. If Auto Calculate is off, **DOWN** and **TO GO** must also be manually updated. Press **<CLEAR>** twice to clear changes and return to the game. Press **<CLEAR>** and **<ENTER>** to blank the Ball On, Down, and To Go sections of the scoreboard.
SIDE OF FIELD 1= ← 3= →	Selects the current side of field for ball placement. Press **1** or the left arrow to set side of field to left. Press **2** or the right arrow to set side of field to right.
BALL ON NN* NN = current setting	Enter the field position (yard line) of the ball and press <**ENTER**>. Press **<CLEAR>** twice to clear changes and return to the game. Press **<CLEAR>** and **<ENTER>** to blank the Ball On, Down, and To Go sections of the scoreboard.

First & 10

The **<FIRST & 10>** key is used to set the down to 1 and yards to go to 10. If Auto Calculate is on, this key is used with the **<BALL ON>** key.

Time Out

The home and guest **<TIME OUT>** keys are used to decrement the number of time outs remaining and start the time out clock. The scoreboard indicator is turned on when the type of time out is selected (full or partial). The scoreboard indicator is turned off when the time out clock expires or is stopped.

Note 1: Only the types (full or partial) of time outs that were configured in the **EDIT SETTINGS** function are displayed on the LCD and available for selection.

Note 2: The up and down arrow keys can also be used to select the full and partial time outs.

LCD Display	Action
TIME OUT-HOME FULL N *N* = current setting	Press **<TIME OUT>** to display the number of full time outs remaining. To accept the full time out and start the time out clock, press **<YES>**. Full time out decrements. To decline the selection of a full time out, press **<NO>**. Full time out does not decrement. **Note:** The up and down arrow keys can also be used to select the full and partial time outs.
TIME OUT-HOME PARTIAL N *N* = current setting	Press **<TIME OUT>** a second time to display the number of partial time outs remaining. To accept the partial time out and start the time out clock, press **<YES>**. Partial time out decrements. To decline the selection of a partial time out, press **<NO>**. Partial time out does not decrement. **Note:** The up and down arrow keys can also be used to select the full and partial time outs.
TIME OUT-HOME NO TIME OUTS	This message appears when there are no time outs left.

Score +1, +2, +3, +6, -1

The home and guest **<SCORE +1>, <SCORE +2>, <SCORE +3>** and **<SCORE +6>** keys are used to increment the team score and the **<SCORE -1>** key is used to decrement the team score. These keys will also blank the BALL ON, DOWN, and TO GO values when pressed.

LCD Display	Action
TEAM SCORE-+1 HOME NNN NNN = current setting	Press the appropriate score key to increment or decrement the score for the home or guest team. The LCD shows which key was pressed and the new value for the team score of the corresponding team.

Possession

The **<POSS>** keys turn the home and guest possession indicators on and off. If Auto Calculate is on, **PLAY DIRECTION** and **SIDE OF FIELD** must also be selected.

LCD Display	Action
HOME POSSESSION ON	If Auto Calculate is on, **PLAY DIRECTION**, **SIDE OF FIELD** and **BALL ON** must also be selected. Press the home or guest **<POSS>** key to turn on the possession indicator for that team.
HOME POSSESSION OFF	To turn off the possession indicator, press the same **<POSS>** key a second time or press the opposite **<POSS>** key.
PLAY DIRECTION 1=← 3=→	Select the direction of play for the current series of downs. Press **1** or the left arrow to set play direction from right to left. Press **3** or the right arrow to set play direction from left to right.

(Continued on next page)

(Continued from previous page)

LCD Display	Action
SIDE OF FIELD 1= ← 3= →	Selects the current side of field for ball placement. Press **1** or the left arrow to set side of field to left. Press **3** or the right arrow to set side of field to right.
BALL ON NN* *NN* = current setting	Enter the field position (yard line) of the ball and press <**ENTER**>. If Auto Calculate is off, **DOWN** and **TO GO** must also be manually updated. Press <**CLEAR**> twice to clear changes and return to the game. Press <**CLEAR**> and <**ENTER**> to blank the Ball On, Down, and To Go sections of the scoreboard.
BALL ON NN |→ DOWN N TO GO NN *NN* = current setting	If Auto Calculate is on, the current settings for **BALL ON**, **DOWN** and **TO GO** are displayed. To accept the current settings, press <**YES**>. To decline the selection of the current settings, press **<NO>**. To change the current settings, use the right and left arrow keys to scroll to **BALL ON**, **DOWN** or **TO GO.** Enter the correct value on the number pad and press <**ENTER**>. Press <**CLEAR**> twice to clear changes and return to the game.
TO GO IS 0 EDIT OR 1ST & 10	This prompt displays briefly if the **TO GO** value is zero. If the number of yards to go is actually zero, press the <**FIRST & 10**> key. If a short distance remains, enter the correct **TO GO** value and press <**ENTER**>.

(Continued on next page)

(Continued from previous page)

LCD Display	Action
BALL ON NN ILLEGAL VALUE NN = current setting	**ILLEGAL VALUE** displays when the **BALL ON** value is greater than the **CENTER FIELD** value entered in the settings menu. Enter the correct field position (yard line) of the ball and press <**ENTER**>. The down is automatically set to **1** and the To Go yards set to **10**.

Yards Rushing

Press **<YARDS RUSHING>** to manually enter the number of rushing yards gained or lost on a play.

LCD Display	Action
RUSHING -HOME YARDS NN* NN = current setting	Enter the number of rushing yards gained or lost on a play and press <**ENTER**>. Press **<CLEAR>** twice to clear changes and return to the game.
RUSHING -HOME 1=GAIN 3=LOSS	Select gain or loss to add or subtract from total rushing yards. Press **1** for a gain. Press **3** for a loss.
RUSHING -HOME YDS TOTAL NNN NNN = current setting	A prompt showing total rushing yards displays briefly.

Yards Passing

Press **<YARDS PASSING>** to manually enter the number of passing yards gained or lost on a play.

LCD Display	Action
PASSING -HOME YARDS NN NN = current setting	Enter the number of passing yards gained or lost on a play and press <**ENTER**>. Press **<CLEAR>** twice to clear changes and return to the game.
PASSING -HOME 1=GAIN 3=LOSS	Select gain or loss to add or subtract from total passing yards. Press **1** for a gain. Press **3** for a loss.
PASSING -HOME YDS TOTAL NNN NNN = current setting	A prompt showing total passing yards displays briefly.

First Downs +1

LCD Display	Action
HOME +1 FIRST DOWNS NN NN = current setting	Press <**FIRST DOWN +1**> to manually increment the number of first downs. A prompt showing total first downs displays briefly.

8.2 Edit

The **<EDIT>** key allows the user to select and edit the following scoreboard fields. Press **<EDIT>** and the key for the home or guest field to be edited.

Time Out

Note 1: Only the time outs configured in the **EDIT SETTINGS** function are displayed on the LCD and available for selection.

Note 2: The up and down arrow keys can also be used to select the full and partial time outs.

LCD Display	Action
TIME OUT-HOME FULL N* *N* = current setting	Press **<EDIT> <TIME OUT>** for the home or guest team to display the current setting of full time outs remaining. Enter the correct number of full time outs on the number pad and press **<ENTER>**.
TIME OUT-HOME PARTIAL N* *N* = current setting	Press **<EDIT> <TIME OUT>** for the home or guest team a second time or the down arrow key to display the current setting of full time outs remaining. Enter the correct number of partial time outs on the number pad and press **<ENTER>**.

Score +1, +2, +3, +6, -1

LCD Display	Action
TEAM SCORE-EDIT HOME NNN* *NNN* = current setting	Press **<EDIT>** and any of the **<SCORE>** keys for the home or guest team to display the current team score setting. Enter the correct team score on the number pad and press **<ENTER>**.

Quarter +1

LCD Display	Action
QUARTER-EDIT N* N = current setting	Press **<EDIT> <QUARTER +1>** to display the current quarter setting. Enter the correct quarter number on the number pad and press **<ENTER>**. The full time outs may be reset.

Time Out On/Off

LCD Display	Action
TIME OUTS-EDIT FULL MM:SS MM:SS = minutes, seconds	Press **<EDIT> <TIME OUT ON/OFF>** to display the current time setting for full time outs. Enter the correct time on the number pad and press **<ENTER>**.
TIME OUT- EDIT PARTIAL MM:SS MM:SS = minutes, seconds	Press **<TIME OUT ON/OFF>** a second time or the down arrow key to display the configured time for partial time out length. Enter the correct time on the number pad and press **<ENTER>**.

8.3 Menu

The **<MENU>** key allows the user to select from a list of options specific for each sport. The up and down arrow keys allow the user to scroll through the menu list. Pressing a key other than **<YES>**, **<NO>**, the arrow keys, and other allowed keys exits the Menu function.

The **MENU** function should be used at the beginning of each new game to edit the Home and Guest Rosters.

New Game

LCD Display	Action
MENU-MAIN NEW GAME?	Press **<YES>** to clear all of the program data for the last game played or the game in progress and begin running the selected sport. Press **<NO>** to resume the game in progress using the current data and exit the Menu. Press the down arrow key to scroll to the next selection.

New Code

LCD Display	Action
MENU-MAIN NEW CODE?	Press **<YES>** to begin selection of a new code from the ENTER CODE prompt. Press **<NO>** to resume the game in progress using the current data and exit the Menu. Press the down arrow key to scroll to the next selection.

Home Roster, Guest Roster

Home Roster and **Guest Roster** are entered in the same way. **Home Roster** is used as an example.

LCD Display	Action
MENU-ROSTER SELECT HOME	Press **<YES>** or the right or left arrow key to select the Home or Guest Roster submenu and show the first prompt on the LCD. Press **<NO>** to resume the game in progress using the current data and exit the Menu. Press the down arrow key to scroll to the next selection.
HOME-TEAM NAME AAAAAAAAAAAAA*	**The TEAM NAME (LL-2441) insert must be installed to enter the Team Name Message Center (TNMC) settings.** The TNMC is updated after each selection is completed. Use the **COLUMNS, ROWS** and **STROKE** keys to select the **WIDTH, HEIGHT** and **FONT** of the TNMC. The defaults are 48 columns, 8 rows and single stroke. Enter up to fifteen (15) characters for the team name and press **<ENTER>.** **Reinsert the FOOTBALL (LL-2437) insert to continue.**

LCD Display	Action
HOME-TEAM ABBR AAAAAAAAAA*	**The TEAM NAME (LL-2441) insert must be installed to enter the Team Name Message Center (TNMC) settings.** The TNMC is updated after each selection is completed. Use the **COLUMNS, ROWS** and **STROKE** keys to select the **WIDTH, HEIGHT** and **FONT** of the TNMC. The defaults are 48 columns, 8 rows and single stroke. Enter up to ten (10) characters for the team abbreviation and press <**ENTER**>. **Reinsert the FOOTBALL (LL-2437) insert to continue**.

Display Menu

The **DISPLAY MENU** allows the user to start and edit the segment timer or to change the brightness of the scoreboard.

LCD Display	Action
MENU-MAIN ENTER DISPLAY MENU?	Press **<YES>** to select the Display submenu and show the first prompt on the LCD. Press the down arrow key to scroll to the next selection.
MENU-DISPLAY RUN SEG TIMER Y/N EXIT GAME ARE YOU SURE Y/N	**Note:** The segment timer function is disabled while the clock is running. Press **<YES>** to exit the sport code and run the segment timer program. Press **<NO>** or the down arrow key to scroll to the next selection. This prompt confirms that the user wants to exit the sport code and enter the segment timer The SEGMENT TIMER (LL-2475) insert must be installed to enter the Segment Timer settings. Refer to **Section 3** for more information on the Segment Timer. Press **<YES>** to exit the sport code and run the segment timer program. Press **<NO>** or the down arrow key to scroll to the next selection.

(Continued on next page)

(Continued from previous page)

LCD Display	Action
MENU- DIMMING LEVEL (0-9): NN% NN = current level NONE = bright **<0>** 90% = **<1>** 80% = <2> 70% = <3> 60% = <4> 50% = **<5>** 40% = <6> 30% = <7> 20% = <8> 10% = <9>	Press <**0**> through <**9**> or use the arrow keys <🡐> <🡒>, to select the intensity for the digits on the scoreboard. Press <**NO**> to resume the game in progress using the current data, and exit the Menu. Press the down arrow key <🡓> to scroll to the next selection. **Note:** Dim levels pertain to outdoor LED products. Indoor LED and incandescent products only support one level of dimming at 50%.

Edit Settings

LCD Display	Action
MENU-MAIN EDIT SETTINGS?	Press **<YES>** or the right or left arrow key to select the Settings submenu and show the first prompt on the LCD. Refer to **Section 8.4**. Press **<NO>** to resume the game in progress using the current data and exit the Menu. Press the down arrow key to scroll to the next selection.

Time of Day

LCD Display	Action
MENU-MAIN SELECT TOD?	Press **<YES>** or the right arrow key to select the Time of Day submenu and show the first prompt on the LCD. Press **<NO>** to resume the game in progress using the current data and exit the Menu.
MENU-TIME OF DAY 1*12, 2-24 HOUR	Press **<1>** or **<2>** to display the time of day in 12 hour (default) or 24 hour format. Press **<ENTER>** or the down arrow key to scroll to the next selection.
MENU-TIME OF DAY TOD HH:MM:SS HH:MM:SS = current setting	Enter the time of day in hours, minutes, and seconds using the selected format on the number pad and press **<ENTER>**. Press **<ENTER>** or the down arrow key to scroll to the next selection.
MENU-TIME OF DAY 1*GAME 2-TOD * = current setting	Press **<1>** or **<2>** to display the game clock (default) or the time of day clock on the scoreboard. Press the down arrow key to exit the Menu and return to the game.
MENU-TIME OF DAY BLANK GAME DATA?	If 2-tod is selected, this message will be displayed. Press **<ENTER>** to blank all game data on the scoreboard except for the Time of Day digits.

8.4 Settings

The user can edit the following settings when **EDIT SETTINGS** has been selected from the Main Menu.

Main Clock

Note 1: The settings entered for Main Clock are used with the **<SET MAIN CLOCK>** key.

Note 2: The period, break, and overtime lengths are used differently depending on the direction of the main clock. For count down, the main clock is set to the selected length, decrements towards zero, and stops at zero. For count up, the main clock is set to zero, increments towards the selected length, and stops when the selected length is reached.

LCD Display	Action
MAIN CLOCK-MODE TENTH SECOND? N *N* = current setting	When the main clock is set to count down and tenths of a second is selected, the main clock displays in tenths of a second remaining when the time is below one minute. Press **<YES>** to set the main clock to display tenths of a second. Press **<NO>** to display whole seconds.
MAIN CLOCK-TIME PERIOD MM:SS *MM:SS* = current setting	Enter the correct amount of time per period in minutes and seconds on the number pad and press **<ENTER>**. For example, 15:00 per quarter. **Note:** Pressing **<ENTER>** to select the period time as the main clock setting will increment the current period number if the clock value was previously zero.
MAIN CLOCK-TIME BREAK MM:SS *MM:SS* = current setting	Set the amount of time between periods. Enter the correct amount of time for break length in minutes and seconds on the number pad and press **<ENTER>**. For example, 1:00.

(Continued on next page)

(Continued from previous page)

LCD Display	Action
MAIN CLOCK-TIME OVERTIME MM:SS MM:SS = current setting	Set the amount of time for the overtime periods. Enter the correct amount of time for overtime periods in minutes and seconds on the number pad and press **<ENTER>**. For example, 5:00.

Play Clock

The **PLAY CLOCK** setting is used by the remote play clock console.

Note 1: When **RESET ON STOP** is set to yes (Y) the **STOP** switch automatically resets the play clock using the **RESET 1** time and the **RESET** button uses the **RESET 2** time.

Note 2: When **RESET ON STOP** is set to no (N) the **STOP** switch does not reset the play clock and the **RESET** button uses the **RESET 1** time.

LCD Display	Action
PLAY CLOCK-TIME RESET 1 MM:SS MM:SS = current setting	Enter the correct amount of reset time in minutes and seconds on the number pad and press **<ENTER>**. For example, 00:25.
PLAY CLOCK-TIME RESET 2 MM:SS MM:SS = current setting	Enter the correct amount of reset time in minutes and seconds on the number pad and press **<ENTER>**. For example, 00:40.
PLAY CLOCK RESET ON STOP?	Press **<YES>** to automatically reset the play clock when the **<STOP>** button on the remote play clock control console is pressed. Press **<NO>** to disable this feature.

Time Outs

Note 1: If a full or partial time out is not needed for the HOME or GUEST **<TIME OUT>** keys, enter zero for the number of time outs.

Note 2: If a full or partial time out is not needed for **<TIME OUT ON/OFF>,** enter zero for the time.

Note 3: The number for each type of time out must be manually entered for an overtime period using the **<EDIT> <TIME OUT>** key sequence for each team.

LCD Display	Action
TIME OUTS-MODE FULL N N = current setting	Enter the number of full time outs per half on the number pad and press **<ENTER>**. The number of full time outs is automatically reset to this value at halftime.
TIME OUTS-TIME FULL MM:SS MM:SS = current setting	Enter the amount of time for a full time out in minutes and seconds on the number pad and press **<ENTER>**. For example, 1:00.
TIME OUTS-MODE WARNING MM:SS MM:SS = current setting	A warning horn can be configured to signal the end of a full/partial time out. While the time out clock is counting down, the horn will sound for one second when the warning time is reached. Enter a zero for the time to disable the warning horn. Enter the time in minutes and seconds on the number pad and press **<ENTER>**.
TIME OUTS-MODE PARTIAL N N = current setting	Enter the number of partial time outs on the number pad and press **<ENTER>**.
TIME OUTS-TIME PARTIAL MM:SS MM:SS = current setting	Enter the amount of time for a partial time out in minutes and seconds on the number pad and press **<ENTER>**. For example, 00:20

(Continued on next page)

(Continued from previous page)

LCD Display	Action
TIME OUTS-MODE SHOW ON MAIN? N *N* = current setting	Press **<YES>** to display the time out time on the LCD and the main clock digits of the scoreboard while the time out clock is active. Press **<NO>** to display the time out time on the LCD only.

Center of Field Yard Line

LCD Display	Action
CENTER FIELD-SET YARDS NN *NN* = current setting	Enter the value of the correct center field yard line on the number pad and press **<ENTER>**. **Note:** This value is used with the Auto Calculate function to calculate Ball On and To Go values the center of the field is crossed.

Auto Calculate

LCD Display	Action
BALL ON-MODE AUTO CALCULATE?	Press **<YES>** to enable the Auto Ball On - To Go calculation. The number of yards to go and the correct down are automatically calculated and displayed. Press **<NO>** to disable this feature and manually enter the down and the number of yards to go.

Select Captions

LCD Display	Action
SELECT CAPTIONS ON 1 ← → 2 OFF	This menu option allows for the controlled backlit captions to be turned ON/OFF. Press the <**1**> key to select ON and OFF for captions controlled by control #1. Press the <**2**> key to select ON and OFF for captions controlled by control #2.

Score by Quarter

LCD Display	Action
SCORE BY QUARTER Y/N? X *X* = current setting	This feature allows for scores to be recorded by quarter. This data is available on the RTD output. Press <**YES**> to score by quarter or press <**NO**> to not score by quarter. **Note:** If this feature is enabled, all scores are edited by quarter. Use this function only when needed.

Switch Output

The All Sport 5000 series console has a switch that can be used to drive a number of different devices. The switch can be configured to operate under different settings. The default setting is 1-CLOCK= 0.

To display the switch setting that you want to select:

Press the number (0,1,2,3) key as a shortcut or use the left and right arrow keys to scroll to the desired setting.

Press **<YES>** to select the new setting.

Press **<NO>** or the down arrow key to leave the switch setting and display the next prompt (refer to the menu on the following page).

The possible settings for the switch output are as follows:

Setting	Result
0 - DISABLED SWITCH OUTPUT=N 0-DISABLED? N = current setting	The switch remains open at all times and any external devices are disabled.
1-CLOCK = 0 SWITCH OUTPUT=N 1-CLOCK =0? N = current setting	In count down mode, the switch closes when the main clock reaches zero and remains closed until a nonzero value is entered. In count up mode, the switch closes when the main clock reaches the proper period, break, or overtime length and opens when any other value is entered.
2-CLOCK STOP SWITCH OUTPUT=N 2-CLOCK STOP? N = current setting	The switch closes when the main clock is stopped and opens when the main clock is running. External devices are disabled when the main clock is running.
3-MAIN HORN SWITCH OUTPUT=N 3-MAIN HORN? N = current setting	The switch closes when the main horn sounds. This could be when Auto Horn is enabled and the main clock reaches zero or when **<HORN>** is pressed.

Default Settings

Write the settings for this installation in the space (Custom) provided.

Setting	Default	Custom 1	Custom 2	Custom 3
Tenth of a Second	No			
Period Length	8:00			
Break Length	10:00			
Overtime Length	5:00			
Play Clock Reset 1	0:25			
Play Clock Reset 2	0:25			
Play Clock Reset On Stop	No			
Full Time Outs	3			
Full Time Out	1:00			
Partial Time Outs	0			
Partial Time Out	0:00			
Center of Field	50			
Auto Calculate	Yes			
Switch Output	1-Clock = 0			

Section 9: Hockey Operations

Sport Insert: LL-2436

The Sport Insert drawing is located at the end of this section. The Team Name insert and Block Diagram drawings are located in **Appendix A**. The **Quick Reference** is located in **Appendix D**.

Reference Drawings:

Insert, Hockey ..... **Drawing A-124218**
Block Diagrams, A/S5000/3000 Hockey ..... **Drawing A-124689**
Insert, Team Name ..... **Drawing A-125290**

Refer to the information in **Section 2** to start up the console and use the sport insert. Read **Section 2** carefully to fully understand the following operation instructions.

If an insert is lost or damaged, a copy of the insert drawing located at the end of this section can be used until a replacement can be ordered.

Use the labels provided in **Appendix B** to attach the correct code number label to the sport insert in the appropriate location. Write the code number in the space provided below.

Write the correct code number here.

If you do not know the code number to enter for your scoreboard, refer to **Appendix B** in this manual. If you do not know the model number of your scoreboard, refer to the **Installation and Maintenance** manual provided with the scoreboard.

9.1 Shots on Goal Console Operation

Enter code 4000 to use the All Sport 5000 console as a shots-on-goal console. All keys other than **Home and Guest Shots on Goal +1 Goal -1** will be disabled.

9.2 Hockey Keys

Time Out On/Off
<TIME OUT ON/OFF> stops and starts the time out clock. The length of both the full and partial time outs can also be changed when the time out clock is stopped.

Note 1: Only the time outs configured in the **EDIT SETTINGS** function are displayed on the LCD and available for selection (please refer to the table on the following page).

Note 2: The up and down arrow keys can also be used to select the full and partial time outs.

LCD Display	Action
TIME OUT-SELECT FULL MM:SS MM:SS = minutes, seconds	Press **<TIME OUT ON/OFF>** to display the configured time for full time out length. To accept the full time out length, press **<YES>**. To decline the selection of the full time out length, press **<NO>**. To change the full time out length, enter the new length in minutes and seconds on the number pad and press **<ENTER>**. Press **<CLEAR>** twice to clear changes and return to the game.
TIME OUT-SELECT PARTIAL MM:SS MM:SS = minutes, seconds	Press **<TIME OUT ON/OFF>** a second time to display the configured time for partial time out length. To accept the partial time out length, press **<YES>**. To decline the selection of the partial time out length, press **<NO>.** To change the partial time out length, enter the new length in minutes and seconds on the number pad and press **<ENTER>**. Press **<CLEAR>** twice to clear changes and return to the game.

Enable Penalty Clocks
Press **<ENABLE PENALTY CLOCKS>** to allow the penalty clocks to count when the main clock is on.

Disable Penalty Clocks
Press **<DISABLE PENALTY CLOCKS>** to disable the penalty clocks from counting when the main clock is on.

Minor/Major Penalty
The **<MINOR PENALTY>** and **<MAJOR PENALTY>** are used to enter the penalty time when **<PLAYER PENALTY>** is selected. Refer to **Subsection Player Penalty**.

Period +1

LCD Display	Action
PERIOD +1 N *N* = current setting	Press **<PERIOD +1>** to increment the period number. A prompt showing period number displays briefly.

Penalty

LCD Display	Action
HOME PENALTY ON	Press the home or guest **<PENALTY>**key, to turn on the penalty indicator for that team.
HOME PENALTY OFF	To turn off the penalty indicator, press the same **<PENALTY>** key a second time.

Time Out

The home and guest **<TIME OUT>** keys are used to decrement the number of time outs remaining and start the time out clock. The scoreboard indicator is turned on when the type of time out is selected (full or partial). The scoreboard indicator is turned off when the time out clock expires or is stopped.

Note 1: Only the types (full or partial) of time outs that were configured in the **EDIT SETTINGS** function are displayed on the LCD and available for selection (please refer to the table on the following page).

Note 2: The up and down arrow keys can also be used to select the full and partial time outs.

LCD Display	Action
TIME OUT-HOME FULL? N N = current setting	Press **<TIME OUT>** to display the number of full time outs remaining. To accept the full time out and start the time out clock, press **<YES>**. Full time out decrements. To decline the selection of a full time out, press **<NO>**. Full time out does not decrement. **Note:** The up and down arrow keys can also be used to select the full and partial time outs.
TIME OUT-HOME PARTIAL? N N = current setting	Press **<TIME OUT>** a second time to display the number of partial time outs remaining. To accept the partial time out and start the time out clock, press **<YES>**. Partial time out decrements. To decline the selection of a partial time out, press **<NO>**. Partial time out does not decrement. **Note:** The up and down arrow keys can also be used to select the full and partial time outs.
TIME OUT-HOME NO TIME OUTS	This message appears when there are no time outs left.

Player Penalty

LCD Display	Action
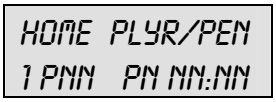 NN = current setting	Press <**PLAYER PENALTY**> to add a new penalty or edit an existing penalty for the home or guest team. To edit an existing penalty, use the up and down arrow keys to scroll to the desired penalty and press <**ENTER**>. Enter the jersey number of the player with the penalty on the number pad and press <**ENTER**>. Press <**CLEAR**> twice to clear changes and return to the game.
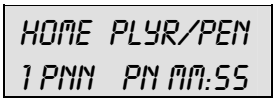 NN = player number MM:SS = penalty time	The default penalty time initially displayed is the minor penalty value that was entered in **Settings.** Enter the penalty time by pressing the **<MINOR PENALY>** or <**MAJOR PENALTY**> key or use the number pad to enter the correct penalty time and then press <**ENTER**>**.** Pressing <**MINOR PENALTY**> or <**MAJOR PENALTY**> additional times will add the configured time for that penalty with each press. Press the <**CLEAR**> to clear the penalty time if <**MINOR PENALTY**> or <**MAJOR PENALTY**> are pressed too many times.

Set Main Clock

LCD Display	Action
MAIN CLOCK -SET CURR MM:SS.T* *MM:SS.T* = minutes, seconds, tenths of a second	After the main clock has been stopped, press <**SET MAIN CLOCK**> to display the current time of the main clock. To change the time, enter the desired time on the number pad and press <**ENTER**>. Press <**CLEAR**> twice to clear changes and return to the game.
ADJUST PENALTY TIMERS Y/N*	If there are penalty times and the <**START**> has been pressed at least once after setting the period time, the **Adjust Penalty** timers question will be displayed. A <**YES**> response will adjust all penalty timers to the correct time based on the time entered for the main clock. A<**NO**> response, will not change the penalty timers.

Score, Shots on Goal and Saves

The home and guest **<SCORE +1, -1>, <SHOTS ON GOAL +1, -1>** and **<SAVES +1, -1>** keys are all used to increment and decrement their respective totals. **Score** is used as an example.

LCD Display	Action
TEAM SCORE-EDIT HOME NNN *NNN* = current setting	Press the appropriate key to increment or decrement the total for the home or guest team. For example, **<SCORE +1, -1>.** Enter the correct number on the number pad and press **<ENTER>**. The LCD shows which key was pressed and the new value for the team score of the corresponding team.

Clear All Penalties

Press **<CLEAR ALL PENALTIES>** to delete all of the penalties for the home or guest team.

LCD Display	Action
HOME PLYR/PEN CLEAR ALL Y/N?	Press **<YES>** to clear the penalties for all players in the roster. Press **<NO>** to decline the selection and return to the game.

Delete Penalty

Press **<DELETE PENALTY>** to delete a single penalty for the home or guest team.

LCD Display	Action
HOME DEL PEN? 1 PNN PN NN:NN *NN* = current setting	Use the up and down arrow keys to scroll to the correct penalty and press **<ENTER>.** Press **<CLEAR>** to decline the selection and return to the game.

9.3 Edit

The **<EDIT>** key allows the user to select and edit the following scoreboard fields. Press **<EDIT>** and the key for the home or guest field to be edited.

Time Out

Note 1: Only the time outs configured in the **EDIT SETTINGS** function are displayed on the LCD and available for selection (please refer to the table on the following page).

Note 2: The up and down arrow keys can also be used to select the full and partial time outs.

LCD Display	Action
TIME OUT-HOME FULL N* N = current setting	Press **<EDIT> <TIME OUT>** for the home or guest team to display the current setting of partial time outs remaining. Enter the correct number of full time outs on the number pad and press **<ENTER>**.
TIME OUT-HOME PARTIAL N* N = current setting	Press **<EDIT> <TIME OUT>** for the home or guest team a second time or the down arrow key to display the current setting of full time outs remaining. Enter the correct number of partial time outs on the number pad and press **<ENTER>**.

Score, Shots on Goal and Saves

The home and guest **<SCORE +1, -1>**, **<SHOTS ON GOAL +1, -1>** and **<SAVES +1, -1>** keys are all edited in the same way. **Score** is used as an example.

LCD Display	Action
TEAM SCORE-EDIT HOME NNN NNN = current setting	Press **<EDIT>** and the appropriate statistic key to display the current setting. For example, **<SCORE +1, -1>.** Enter the correct number on the number pad and press **<ENTER>**.

Period +1

LCD Display	Action
PERIOD-EDIT N* N = current setting	Press **<EDIT> <PERIOD +1>** to display the current period setting. Enter the correct quarter number on the number pad and press **<ENTER>**. The full time outs are reset.

Time Out On/Off

LCD Display	Action
TIME OUTS-EDIT FULL MM:SS MM:SS = minutes, seconds	Press **<EDIT> <TIME OUT ON/OFF>** to display the current time setting for full time outs. Enter the correct time on the number pad and press **<ENTER>**.
TIME OUT- EDIT PARTIAL MM:SS MM:SS = minutes, seconds	Press **<TIME OUT ON/OFF>** a second time or the down arrow key to display the configured time for partial time out length. Enter the correct time on the number pad and press **<ENTER>**.

9.4 Menu

The **<MENU>** key allows the user to select from a list of options specific for each sport. The up and down arrow keys allow the user to scroll through the menu list. Pressing a key other than **<YES>**, **<NO>**, the arrow keys, and other allowed keys exits the Menu function.

The **Menu** function should be used at the beginning of each new game to edit the Home and Guest Rosters.

New Game

LCD Display	Action
MENU-MAIN NEW GAME?	Press **<YES>** to clear all of the program data for the last game played or the game in progress and begin running the selected sport. Press **<NO>** to resume the game in progress using the current data and exit the Menu. Press the down arrow key to scroll to the next selection.

New Code

LCD Display	Action
MENU-MAIN NEW CODE?	Press **<YES>** to begin selection of a new code from the ENTER CODE prompt. Press **<NO>** to resume the game in progress using the current data and exit the Menu. Press the down arrow key to scroll to the next selection.

Home Roster, Guest Roster

Home Roster and **Guest Roster** are entered in the same way. **Home Roster** is used as an example.

LCD Display	Action
MENU-ROSTER SELECT HOME	Press **<YES>** or the right or left arrow key to select the Home or Guest Roster submenu and show the first prompt on the LCD. Press **<NO>** to resume the game in progress using the current data and exit the Menu. Press the down arrow key to scroll to the next selection.
HOME-TEAM NAME AAAAAAAAAAAAA*	**The TEAM NAME (LL-2441) insert must be inserted to enter the Team Name Message Center (TNMC) settings.** The TNMC is updated after each selection is completed. Use the **COLUMNS, ROWS** and **STROKE** keys to select the **WIDTH, HEIGHT** and **FONT** of the TNMC. The defaults are 48 columns, 8 rows and single stroke. Enter up to fifteen (15) characters for the team name and press **<ENTER>.** **Reinsert the HOCKEY (LL-2436) insert to continue.**

(Continued on next page)

(Continued from previous page)

LCD Display	Action
HOME-TEAM ABBR AAAAAAAAAA*	**The TEAM NAME (LL-2441) insert must be inserted to enter the Team Name Message Center (TNMC) settings.** The TNMC is updated after each selection is completed. Use the **COLUMNS, ROWS** and **STROKE** keys to select the **WIDTH, HEIGHT** and **FONT** of the TNMC. The defaults are 48 columns, 8 rows and single stroke. Enter up to ten (10) characters for the team abbreviation and press <**ENTER**>. **Reinsert the HOCKEY (LL-2436) insert to continue.**

Display Menu

The **DISPLAY MENU** allows the user to start and edit the segment timer or to change the brightness of the scoreboard.

LCD Display	Action
MENU-MAIN ENTER DISPLAY MENU?	Press **<YES>** to select the Display submenu and show the first prompt on the LCD. Press the down arrow key to scroll to the next selection.

LCD Display	Action
MENU-DISPLAY RUN SEG TIMER Y/N	**Note:** The segment timer function is disabled while the clock is running. Press **<YES>** to exit the sport code and run the segment timer program. Press **<NO>** or the down arrow key to scroll to the next selection.
EXIT GAME ARE YOU SURE Y/N	This prompt confirms that the user wants to exit the sport code and enter the segment timer **The SEGMENT TIMER (LL-2475) insert must be inserted to enter the Segment Timer settings.** Refer to **Section 3** for more information on the Segment Timer. Press **<YES>** to exit the sport code and run the segment timer program. Press **<NO>** or the down arrow key to scroll to the next selection.
MENU- DIMMING LEVEL (0-9): NN% NN = current level NONE = bright <0> 90% = <1> 80% = <2> 70% = <3> 60% = <4> 50% = <5> 40% = <6> 30% = <7> 20% = <8> 10% = <9>	Press **<0>** through **<9>** or use the arrow keys <🡐> <🡒>, to select the intensity for the digits on the scoreboard. Press <**NO**> to resume the game in progress using the current data, and exit the Menu. Press the down arrow key <🡓> to scroll to the next selection. **Note:** Dim levels pertain to outdoor LED products. Indoor LED and incandescent products only support one level of dimming at 50%.

Edit Settings

LCD Display	Action
MENU-MAIN EDIT SETTINGS?	Press **<YES>** or the right or left arrow key to select the Settings submenu and show the first prompt on the LCD. Refer to **Section 9.5 Settings.** Press **<NO>** to resume the game in progress using the current data and exit the Menu. Press the down arrow key to scroll to the next selection.

Time of Day

LCD Display	Action
MENU-MAIN SELECT TOD?	Press **<YES>** or the right arrow key to select the Time of Day submenu and show the first prompt on the LCD. Press **<NO>** to resume the game in progress using the current data and exit the Menu.
MENU-TIME OF DAY 1*12, 2-24 HOUR	Press **<1>** or **<2>** to display the time of day in 12 hour (default) or 24 hour format. Press **<ENTER>** or the down arrow key to scroll to the next selection.
MENU-TIME OF DAY TOD HH:MM:SS* HH:MM:SS = current setting	Enter the time of day in hours, minutes, and seconds using the selected format on the number pad and press **<ENTER>**. Press **<ENTER>** or the down arrow key to scroll to the next selection.
MENU-TIME OF DAY 1*GAME 2-TOD * = current setting	Press **<1>** or **<2>** to display the game clock (default) or the time of day clock on the scoreboard. Press the down arrow key to exit the Menu and return to the game.

LCD Display	Action
MENU-TIME OF DAY BLANK GAME DATA?	If 2-tod is selected, this message will be displayed. Press **<ENTER>** to blank all game data on the scoreboard except for the Time of Day digits.

9.5 Settings

The following settings can be edited by the user when **EDIT SETTINGS** has been selected from the Main Menu.

Main Clock
Note 1: The settings entered for Main Clock are used with the **<SET MAIN CLOCK>** key.

Note 2: The period, break, and overtime lengths are used differently depending on the direction of the main clock. For count down, the main clock is set to the selected length, decrements towards zero, and stops at zero. For count up, the main clock is set to zero, increments towards the selected length, and stops when the selected length is reached.

LCD Display	Action
MAIN CLOCK-MODE TENTH SECOND? N *N* = current setting	When the main clock is set to count down and tenths of a second is selected, the main clock displays in tenths of a second remaining when the time is below one minute. Press **<YES>** to set the main clock to display tenths of a second. Press **<NO>** to display whole seconds.
MAIN CLOCK-TIME PERIOD MM:SS *MM:SS* = current setting	Enter the correct amount of time per period in minutes and seconds on the number pad and press **<ENTER>**. For example, 20:00 per period. **Note:** Pressing <**ENTER**> to select the period time as the main clock setting will increment the current period number if the clock value was previously zero.

(Continued on next page)

(Continued from previous page)

LCD Display	Action
' MAIN CLOCK-TIME BREAK MM:SS MM:SS = current setting	Set the amount of time between periods. Enter the correct amount of time for break length in minutes and seconds on the number pad and press **<ENTER>**. For example, 1:00.
MAIN CLOCK-TIME OVERTIME MM:SS MM:SS = current setting	Set the amount of time for the overtime periods. Enter the correct amount of time for overtime periods in minutes and seconds on the number pad and press **<ENTER>**. For example, 5:00.

Penalty Times

Default times can be set for the minor and major penalty keys. The minor penalty time is used as the default when first entering the player penalty function.

LCD Display	Action
PENALTY TIME MINOR MM:SS MM:SS = current setting	Enter the correct default time for a minor penalty in minutes and seconds on the number pad and press <**ENTER**>. For example, 02:00. The minor penalty time is used as the default when first entering the player penalty function.
PENALTY TIME MAJOR MM:SS MM:SS = current setting	Enter the correct default time for a major penalty in minutes and seconds on the number pad and press <**ENTER**>. For example, 02:00.

Time Outs

Note 1: If a full or partial time out is not needed for the HOME or GUEST **<TIME OUT>** keys, enter zero for the number of time outs.

Note 2: If a full or partial time out is not needed for **<TIME OUT ON/OFF>,** enter zero for the time.

Note 3: The number for each type of time out must be manually entered for an overtime period using the **<EDIT> <TIME OUT>** key sequence for each team (please refer to the menu on the following page).

LCD Display	Action
TIME OUTS-MODE FULL N* N = current setting	Enter the number of full time outs on the number pad and press **<ENTER>**.
TIME OUTS-TIME FULL MM:SS* MM:SS = current setting	Enter the amount of time for a full time out in minutes and seconds on the number pad and press **<ENTER>**. For example, 1:00.
TIME OUTS-MODE WARNING MM:SS* MM:SS = current setting	A warning horn can be configured to signal the end of a full/partial time out. While the time out clock is counting down, the horn will sound for one second when the warning time is reached. Enter a zero for the time to disable the warning horn. Enter the time in minutes and seconds on the number pad and press **<ENTER>**.
TIME OUTS-MODE PARTIAL N* N = current setting	Enter the number of partial time outs on the number pad and press **<ENTER>**.
TIME OUTS-TIME PARTIAL MM:SS* MM:SS = current setting	Enter the amount of time for a partial time out in minutes and seconds on the number pad and press **<ENTER>**. For example, 00:20

(Continued on next page)

(Continued from previous page)

LCD Display	Action
TIME OUTS-MODE SHOW ON MAIN? N *N* = current setting	Press **<YES>** to display the time out time on the LCD and the main clock digits of the scoreboard while the time out clock is active. Press **<NO>** to display the time out time on the LCD only.

Select Captions

LCD Display	Action
SELECT CAPTIONS ON 1 ← → 2 OFF	This menu option allows for the controlled backlit captions to be turned ON/OFF. Press the <**1**> key to select ON and OFF for captions controlled by control #1. Press the <**2**> key to select ON and OFF for captions controlled by control #2.

Switch Output

The All Sport 5000 series console has a switch that can be used to drive a number of different devices. The switch can be configured to operate under different settings.

The default setting is 1-CLOCK= 0.

To display the switch setting that you want to select:

Press the number (0,1,2,3) key as a shortcut or use the left and right arrow keys to scroll to the desired setting.

Press **<YES>** to select the new setting.

Press **<NO>** or the down arrow key to leave the switch setting and display the next prompt.

The possible settings for the switch output are on the following page:

Setting	Result
0 - DISABLED SWITCH OUTPUT=N 0-DISABLED? N = current setting	The switch remains open at all times and any external devices are disabled.
1-CLOCK = 0 SWITCH OUTPUT=N 1-CLOCK =0? N = current setting	In count down mode, the switch closes when the main clock reaches zero and remains closed until a nonzero value is entered. In count up mode, the switch closes when the main clock reaches the proper period, break, or overtime length and opens when any other value is entered.
2-CLOCK STOP SWITCH OUTPUT=N 2-CLOCK STOP? N = current setting	The switch closes when the main clock is stopped and opens when the main clock is running. External devices are disabled when the main clock is running.
3-MAIN HORN SWITCH OUTPUT=N 3-MAIN HORN? N = current setting	The switch closes when the main horn sounds. This could be when Auto Horn is enabled and the main clock reaches zero or when **<HORN>** is pressed.

Default Settings

Write the settings for this installation in the space (Custom) provided.

Setting	Default	Custom 1	Custom 2	Custom 3
Tenth of a Second	Yes			
Period Length	20:00			
Break Length	15:00			
Overtime Length	5:00			
Minor Penalty	2:00			
Major Penalty	5:00			
Full Time Outs	1			
Full Time Out	1:00			
Partial Time Outs	0			
Partial Time Out	0:00			
Switch Output	1-Clock = 0			

Section 10: Soccer Operations

Sport Insert: LL-2440

The Sport Insert drawing is located at the end of this section. The Team Name insert and Block Diagram drawings are located in **Appendix A**. The **Quick Reference** is located in **Appendix D**.

Reference Drawings:

Block Diagrams, A/S5000/3000, Outdoor Sports ..... **Drawing A-124690**
Insert, Soccer ..... **Drawing A-125215**
Insert, Team Name ..... **Drawing A-125290**

Refer to the information in **Section 2** to start up the console and use the sport insert. Read **Section 2** carefully to fully understand the following operation instructions.

If an insert is lost or damaged, a copy of the insert drawing located at the end of this section can be used until a replacement can be ordered.

Use the labels provided in **Appendix B** to attach the correct code number label to the sport insert in the appropriate location. Write the code number in the space provided below.

Write the correct code number here.

If you do not know the code number to enter for your scoreboard, refer to **Appendix B** in this manual. If you do not know the model number of your scoreboard, refer to the **Installation and Maintenance** manual provided with the scoreboard.

10.1 Soccer Keys

Time Out On/Off

<TIME OUT ON/OFF> stops and starts the time out clock. The length of both the full and partial time outs can also be changed when the time out clock is stopped.

LCD Display	Action
TIME OUT-SELECT FULL MM:SS MM:SS = minutes, seconds	Press **<TIME OUT ON/OFF>** to display the configured time for full time out length. To accept the full time out length and press **<YES>**. To decline the selection of the full time out length, press **<NO>**. To change the full time out length, enter the new length in minutes and seconds on the number pad and press **<ENTER>**. Press **<CLEAR>** twice to clear changes and return to the game. **Notes:** Only the time outs configured in the **EDIT SETTINGS** function are displayed on the LCD and available for selection. The up and down arrow keys can also be used to select the full and partial time outs.

(Continued on next page)

(Continued from previous page)

LCD Display	Action
TIME OUT-SELECT PARTIAL MM:SS MM:SS = minutes, seconds	Press **<TIME OUT ON/OFF>** a second time to display the configured time for partial time out length. To accept the partial time out length and press **<YES>**. To decline the selection of the partial time out length, press **<NO>.** To change the partial time out length, enter the new length in minutes and seconds on the number pad and press **<ENTER>**. Press **<CLEAR>** twice to clear changes and return to the game. **Notes:** Only the time outs configured in the **EDIT SETTINGS** function are displayed on the LCD and available for selection. The up and down arrow keys can also be used to select the full and partial time outs.

Half +1

LCD Display	Action
HALF: +1 N N = current setting	Press **<HALF +1>** to increment the half number. A prompt showing period number will display briefly.

Time Out

The home and guest **<TIME OUT>** keys are used to decrement the number of time outs remaining and start the time out clock. The scoreboard indicator is turned on when the type of time out is selected (full or partial). The scoreboard indicator is turned off when the time out clock expires or is stopped.

Note 1: Only the types (full or partial) of time outs that were configured in the **EDIT SETTINGS** function are displayed on the LCD and available for selection.

Note 2: The up and down arrow keys can also be used to select the full and partial time outs.

LCD Display	Action
TIME OUTS-HOME FULL N N = current setting	Press **<TIME OUT>** to display the number of full time outs remaining. To accept the full time out and start the time out clock, press **<YES>**. Full time out decrements. To decline the selection of a full time out, press **<NO>**. Full time out does not decrement. **Note:** The up and down arrow keys can also be used to select the full and partial time outs.
TIME OUTS-HOME PARTIAL N N = current setting	Press **<TIME OUT>** a second time to display the number of partial time outs remaining. To accept the partial time out and start the time out clock, press **<YES>**. Partial time out decrements. To decline the selection of a partial time out, press **<NO>**. Partial time out does not decrement. **Note:** The up and down arrow keys can also be used to select the full and partial time outs.
TIME OUTS-HOME NO TIME OUTS	This message appears when there are no time outs left.

Score +1, -1

The home and guest **<SCORE +1>** and **<SCORE -1>** keys are used to increment and decrement the team score.

LCD Display	Action
TEAM SCORE: +1 HOME NNN *NNN* = current setting	Press the appropriate score key to increment or decrement the score for the home or guest team. The LCD shows which key was pressed and the new value for the team score of the corresponding team.

Other Increment and Decrement Keys

The home and guest **<SHOTS ON GOAL +1, -1>**, **<SAVES +1, -1>**, **<CORNER KICKS +1, -1>**, **<FOULS +1, -1>** and **<PENALTY KICKS +1, -1>** keys are all edited in the same way. **Saves** is used as an example.

LCD Display	Action
SAVES: +1 HOME NN *NNN* = current setting	Press the appropriate key to increment or decrement the statistics for the home or guest team. For example, **<SAVES +1, -1>.** The LCD shows which key was pressed and the new value for the corresponding team.

10.2 Edit

The **<EDIT>** key allows the user to select and edit the following scoreboard fields. Press **<EDIT>** and the key for the home or guest field to be edited.

Half +1

LCD Display	Action
HALF: EDIT N* *N* = current setting	Press **<EDIT> <HALF +1>** to display the current quarter setting. Enter the correct half number on the number pad and press **<ENTER>**. The full time outs are reset.

Time Out On/Off

LCD Display	Action
TIME OUTS-EDIT FULL MM:SS MM:SS = minutes, seconds	Press **<EDIT> <TIME OUT ON/OFF>** to display the current time setting for full time outs. Enter the correct time on the number pad and press **<ENTER>**.
TIME OUTS-EDIT PARTIAL MM:SS MM:SS = minutes, seconds	Press **<TIME OUT ON/OFF>** a second time or the down arrow key to display the configured time for partial time out length. Enter the correct time on the number pad and press **<ENTER>**.

Time Out

Note 1: Only the time outs configured in the **EDIT SETTINGS** function are displayed on the LCD and available for selection.

Note 2: The up and down arrow keys can also be used to select the full and partial time outs.

LCD Display	Action
TIME OUT-HOME FULL N* N = current setting	Press **<EDIT> <TIME OUT>** for the home or guest team to display the current setting of full time outs remaining. Enter the correct number of full time outs on the number pad and press **<ENTER>**.
TIME OUT-HOME PARTIAL N* N = current setting	Press **<EDIT> <TIME OUT>** for the home or guest team a second time or the down arrow key to display the current setting of full time outs remaining. Enter the correct number of partial time outs on the number pad and press **<ENTER>**.

Score +1, -1

LCD Display	Action
TEAM SCORE: EDIT HOME NNN* NNN = current setting	Press **<EDIT>** and either of the **SCORE** keys for the home or guest team to display the current team score setting. Enter the correct team score on the number pad and press **<ENTER>**.

Other Increment and Decrement Keys
The home and guest **<SHOTS ON GOAL +1, -1>**, **<SAVES +1, -1>**, **<CORNER KICKS +1, -1>**, **<FOULS +1, -1>** and **<PENALTY KICKS +1, -1>** keys are all edited in the same way. **Saves** is used as an example.

LCD Display	Action
SAVES: EDIT HOME NN NNN = current setting	Press **<EDIT>** and the appropriate statistic key to display the current setting. For example, **<SAVES +1, -1>.** Enter the correct number on the number pad and press **<ENTER>**.

10.3 Menu

The **<MENU>** key allows the user to select from a list of options specific for each sport. The up and down arrow keys allow the user to scroll through the menu list. Pressing a key other than **<YES>**, **<NO>**, the arrow keys, and other allowed keys exits the **Menu** function.

The **Menu** function should be used at the beginning of each new game to edit the Home and Guest Rosters.

New Game

LCD Display	Action
MENU-MAIN NEW GAME?	Press **<YES>** to clear all of the program data for the last game played or the game in progress and begin running the selected sport. Press **<NO>** to resume the game in progress using the current data and exit the Menu. Press the down arrow key to scroll to the next selection.

New Code

When the LCD Display is as shown, the following actions may be selected.

LCD Display	Action
MENU-MAIN NEW CODE?	Press **<YES>** to begin selection of a new code from the **ENTER CODE** prompt. Press **<NO>** to resume the game in progress using the current data and exit the Menu. Press the down arrow key to scroll to the next selection.

Home Roster, Guest Roster

Home Roster and **Guest Roster** are entered in the same way. **Home Roster** is used as an example.

LCD Display	Action
MENU-ROSTER SELECT HOME	Press **<YES>** or the right or left arrow key to select the Home or Guest Roster submenu and show the first prompt on the LCD. Press **<NO>** to resume the game in progress using the current data and exit the Menu. Press the down arrow key to scroll to the next selection.

(Continued on next page)

(Continued from previous page)

LCD Display	Action
HOME-TEAM NAME AAAAAAAAAAAAA*	**The TEAM NAME (LL-2441) insert must be inserted to enter the Team Name Message Center (TNMC) settings.** The TNMC is updated after each selection is completed. Use the **COLUMNS, ROWS** and **STROKE** keys to select the **WIDTH, HEIGHT** and **FONT** of the TNMC. The defaults are 48 columns, 8 rows and single stroke. Enter up to fifteen (15) characters for the team name and press **<ENTER>**. **Reinsert the SOCCER (LL-2440) insert to continue.**
HOME-TEAM ABBR AAAAAAAAAA*	**The TEAM NAME (LL-2441) insert must be inserted to enter the Team Name Message Center (TNMC) settings.** The TNMC is updated after each selection is completed. Use the **COLUMNS, ROWS** and **STROKE** keys to select the **WIDTH, HEIGHT** and **FONT** of the TNMC. The defaults are 48 columns, 8 rows and single stroke. Enter up to ten (10) characters for the team abbreviation and press <**ENTER**>. **Reinsert the SOCCER (LL-2440) insert to continue.**

Display Menu

The **DISPLAY MENU** allows the user to start and edit the segment timer or to change the brightness of the scoreboard.

LCD Display	Action
MENU-MAIN ENTER DISPLAY MENU?	Press **<YES>** to select the Display submenu and show the first prompt on the LCD. Press the down arrow key to scroll to the next selection.

(Continued from previous page)

LCD Display	Action
MENU-DISPLAY RUN SEG TIMER Y/N	**Note:** The segment timer function is disabled while the clock is running. Press **<YES>** to exit the sport code and run the segment timer program. Press **<NO>** or the down arrow key to scroll to the next selection.
EXIT GAME ARE YOU SURE Y/N	This prompt confirms that the user wants to exit the sport code and enter the segment timer. **The SEGMENT TIMER (LL-2475) insert must be inserted to enter the Segment Timer settings.** Refer to **Section 3** for more information on the segment timer. Press **<YES>** to exit the sport code and run the segment timer program. Press **<NO>** or the down arrow key to scroll to the next selection.
MENU- DIMMING LEVEL (0-9): NN% NN = current level NONE = bright <0> 90% = <1> 80% = <2> 70% = <3> 60% = <4> 50% = <5> 40% = <6> 30% = <7> 20% = <8> 10% = <9>	Press **<0>** through **<9>** or use the arrow keys <🡐> <🡒>, to select the intensity for the digits on the scoreboard. Press <**NO**> to resume the game in progress using the current data, and exit the Menu. Press the down arrow key <🡓> to scroll to the next selection. **Note:** Dim levels pertain to outdoor LED products. Indoor LED and incandescent products only support one level of dimming at 50%.

Settings

LCD Display	Action
MENU-MAIN EDIT SETTINGS?	Press **<YES>** or the right or left arrow key to select the Edit Settings submenu and show the first prompt on the LCD. Refer to **Section 10.4**. Press **<NO>** to resume the game in progress using the current data and exit the Menu. Press the down arrow key to scroll to the next selection.

Time of Day

LCD Display	Action
MENU-MAIN SELECT TOD?	Press **<YES>** or the right arrow key to select the Time of Day submenu and show the first prompt on the LCD. Press **<NO>** to resume the game in progress using the current data and exit the Menu.
MENU-TIME OF DAY 1*12, 2-24 HOUR	Press **<1>** or **<2>** to display the time of day in 12 hour (default) or 24 hour format. Press **<ENTER>** or the down arrow key to scroll to the next selection.
MENU-TIME OF DAY TOD HH:MM:SS* HH:MM:SS = current setting	Enter the time of day in hours, minutes, and seconds using the selected format on the number pad and press **<ENTER>**. Press **<ENTER>** or the down arrow key to scroll to the next selection.

(Continued on next page)

(Continued from previous page)

LCD Display	Action
MENU-TIME OF DAY 1*GAME 2-TOD * = current setting	Press **<1>** or **<2>** to display the game clock (default) or the time of day clock on the scoreboard. Press the down arrow key to exit the Menu and return to the game.
MENU-TIME OF DAY BLANK GAME DATA?	If 2-tod is selected, this message will be displayed. Press **<ENTER>** to blank all game data on the scoreboard except for the Time of Day digits.

10.4 Settings

The following settings can be edited by the user when **EDIT SETTINGS** has been selected from the Main Menu.

Main Clock

Note 1: The settings entered for Main Clock are used with the **<SET MAIN CLOCK>** key.

Note 2: The period, break, and overtime lengths are used differently depending on the direction of the main clock. For count down, the main clock is set to the selected length, decrements towards zero, and stops at zero. For count up, the main clock is set to zero, increments towards the selected length, and stops when the selected length is reached.

LCD Display	Action
MAIN CLOCK-TIME PERIOD MM:SS MM:SS = current setting	Enter the correct amount of time per period in minutes and seconds on the number pad and press **<ENTER>**. For example, 20:00 per period. **Note:** Pressing <**ENTER**> to select the period time as the main clock setting will increment the current period number if the clock value was previously zero.

(Continued on next page)

(Continued from previous page)

LCD Display	Action
MAIN CLOCK-TIME BREAK MM:SS MM:SS = current setting	Set the amount of time between periods. Enter the correct amount of time for break length in minutes and seconds on the number pad and press **<ENTER>**. For example, 1:00.

Corner Kicks, Saves, or Fouls

Select whether to display corner kicks, saves, or fouls on the scoreboard.

LCD Display	Action
CORNER,SAVE,FOUL 1-* 2- 3- = current setting	Press <**1**>, <**2**>, or <**3**> to display **Corner Kicks** (default), **Saves**, or **Fouls** on the scoreboard.

Time Outs

Note 1: If a full or partial time out is not needed for the HOME or GUEST **<TIME OUT>** keys, enter zero for the number of time outs.

Note 2: If a full or partial time out is not needed for **<TIME OUT ON/OFF>,** enter zero for the time.

Note 3: The number for each type of time out must be manually entered for an overtime period using the **<EDIT> <TIME OUT>** key sequence for each team (please refer to the table on the following page).

LCD Display	Action
TIME OUTS-MODE FULL N N = current setting	Enter the number of full time outs on the number pad and press **<ENTER>**.
TIME OUTS-TIME FULL MM:SS MM:SS = current setting	Enter the amount of time for a full time out in minutes and seconds on the number pad and press **<ENTER>**. For example, 1:00.
TIME OUTS-MODE WARNING MM:SS MM:SS = current setting	A warning horn can be configured to signal the end of a full/partial time out. While the time out clock is counting down, the horn will sound for one second when the warning time is reached. Enter a zero for the time to disable the warning horn. Enter the time in minutes and seconds on the number pad and press **<ENTER>**.
TIME OUTS-MODE PARTIAL N N = current setting	Enter the number of partial time outs on the number pad and press **<ENTER>**.
TIME OUTS-TIME PARTIAL MM:SS MM:SS = current setting	Enter the amount of time for a partial time out in minutes and seconds on the number pad and press **<ENTER>**. For example, 00:20
TIME OUTS-MODE SHOW ON MAIN? N N = current setting	Press **<YES>** to display the time out time on the LCD and the main clock digits of the scoreboard while the time out clock is active. Press **<NO>** to display the time out time on the LCD only.

Display Penalty/TOL

LCD Display	Action
DISPLAY MODE PENALTY* TOL	This selection allows the operator to decide whether or not to display the penalty or TOL on the penalty digits. The asterisk sign (*) indicates current selection Use the right or left arrow keys (→ / ←) or any number key to change the selection, and then press **<ENTER>**.

Switch Output

The All Sport 5000 series console has a switch that can be used to drive a number of different devices. The switch can be configured to operate under different settings. The default setting is 1-CLOCK= 0.

To display the switch setting that you want to select:

Press the number (0,1,2,3) key as a shortcut or use the left and right arrow keys to scroll to the desired setting.

Press **<YES>** to select the new setting.

Press **<NO>** or the down arrow key to leave the switch setting and display the next prompt (please refer to table on the following page).

The possible settings for the switch output are as follows:

Setting	Result
0 - DISABLED SWITCH OUTPUT=N 0-DISABLED? N = current setting	The switch remains open at all times and any external devices are disabled.
1-CLOCK = 0 SWITCH OUTPUT=N 1-CLOCK =0? N = current setting	In count down mode, the switch closes when the main clock reaches zero and remains closed until a nonzero value is entered. In count up mode, the switch closes when the main clock reaches the proper period, break, or overtime length and opens when any other value is entered.
2-CLOCK STOP SWITCH OUTPUT=N 2-CLOCK STOP? N = current setting	The switch closes when the main clock is stopped and opens when the main clock is running. External devices are disabled when the main clock is running.
3-MAIN HORN SWITCH OUTPUT=N 3-MAIN HORN? N = current setting	The switch closes when the main horn sounds. This could be when Auto Horn is enabled and the main clock reaches zero or when **<HORN>** is pressed.

Default Settings

Write the settings for this installation in the space (Custom) provided.

Setting	Default	Custom 1	Custom 2	Custom 3
Period Length	45:00			
Break Length	10:00			
Corner Kick/Save	1 CORNER			
Full Time Outs	2			
Full Time Out	1:00			
Partial Time Outs	0			
Partial Time Out	00:00			
Switch Output	1-Clock = 0			

Section 11: Tennis Operations

Sport Insert: LL-2483

The Sport Insert drawing is located at the end of this section. The Team Name insert and Block Diagram drawings are located in **Appendix A**.

Reference Drawings:

Block Diagrams, A/S5000/3000, Outdoor Sports ..... **Drawing A-124690**
Insert, Team Name ..... **Drawing A-125290**
Insert, Tennis ..... **Drawing A-131274**

Refer to the information in **Section 2** to start up the console and use the sport insert. Read **Section 2** carefully to fully understand the following operation instructions.

If an insert is lost or damaged, a copy of the insert drawing located at the end of this section can be used until a replacement can be ordered.

Use the labels provided in **Appendix B** to attach the correct code number label to the sport insert in the appropriate location. Write the code number in the space provided below.

Write the correct code number here.

If you do not know the code number to enter for your scoreboard, refer to **Appendix B** in this manual. If you do not know the model number of your scoreboard, refer to the **Installation and Maintenance** manual provided with the scoreboard.

11.1 Tennis Keys

Serve

LCD Display	Action
TOP SERVE ON	**<SERVE>** turns the serve indicators on or off for the respective player.

Matches Won +1

LCD Display	Action
MATCHES WON +1 TOP NN NN = current matches won	Press **<MATCHES WON +1>** to increment the matches won for the current team.

Games Won

LCD Display	Action
GAMES WON +1 TOP N	Press **<GAMES WON +1>** to increment the number of games won in the current set for the respective player.

Point
The **<POINT>** key increments the point value for the respective player. If Tie Break scoring mode is selected, the points will increment by 1. Otherwise, the points will increment as 15, 30, 40 AD or GM. The current point values will be shown on the LCD.

Advantage
The advantage key sets an advantage score for the chosen player. The score digits for this player will display **AD.** The opposite player score will display dashes (- -).

Note: The **<ADVANTAGE>** key is disabled when Tie Break scoring mode is selected.

Deuce
The **<DEUCE>** key sets both scores to 40.

Note: The **<DEUCE>** key is disabled when Tie Break scoring mode is selected.

Tie Break
The **<TIE BREAK>** key sets the mode of scoring to Tie Break mode. In Tie Break scoring mode, points for each player are incremented by one when the **<POINTS>** key is pressed.

Note 1: Tie Break scoring mode may only be selected when both player point values are 0.

Note 2: To change scoring mode back to normal, use the reset game score key (please refer to the table on the following page).

Reset Match

LCD Display	Action
TOP=NN BOT=NN RESET MATCH?	Press **<ENTER>** to reset the current match. All set scores and current game score will be cleared and the set number will be set to 1.
NNN = current setting	

Reset Game Score

Press **<RESET GAME SCORE>** to reset the player points values for the current game.

Match Number +1

LCD Display	Action
MATCH +1 NNNN	Press **<MATCH NUMBER +1>** to increment the current match number.
NNNN = current setting	

Set +1

Press **<SET+1>** to increment the current set number. The new set number and new set games won values will be displayed on the LCD.

11.2 Edit

The **<EDIT>** key allows the user to select and edit the following scoreboard fields. Press **<EDIT>** and the key for the home or guest field to be edited.

Games Won

LCD Display	Action
GAMES WON EDIT SET 1 TOP N nn = current setting	Press **<EDIT> <GAMES WON +1>** to edit the number of games won in the current set for the respective player. Press the up or down arrow keys to move through the games won for sets other than the current set. Press the number keys to edit any of these games won values.

Points

LCD Display	Action
TOP=NN BOT=NN EDIT TOP NN = current setting	Press **<EDIT> <POINT>** to set the point value for the respective player. The current editing score is shown by the bottom line on the LCD.

Set +1

LCD Display	Action
SET: EDIT N N = current setting	Press **<EDIT> <SET>** to edit the current set number.

Match Number +1

LCD Display	Action
MATCH: EDIT NNNN NNNN = current setting	Press **<EDIT> <MATCH NUMBER +1>** to edit the current match number.

Matches Won

LCD Display	Action
MATCHES WON: EDIT TOP NN NN = current matches won	Press **<EDIT> <MATCH WON +1>** to edit the current matches won for the selected team.

11.3 Menu

The **<MENU>** key allows the user to select from a list of options specific for each sport. The up and down arrow keys allow the user to scroll through the menu list. Pressing a key other than **<YES>**, **<NO>**, the arrow keys, and other allowed keys, exit the Menu function.

The **MENU** function should be used at the beginning of each new game to edit the Home and Guest Rosters.

New Game

LCD Display	Action
MENU-MAIN NEW GAME?	Press **<YES>** to clear all of the program data for the last game played or the game in progress and begin running the selected sport. Press **<NO>** to resume the game in progress using the current data and exit the Menu. Press the down arrow key to scroll to the next selection.

New Code

LCD Display	Action
MENU-MAIN NEW CODE?	Press **<YES>** to begin selection of a new code from the ENTER CODE prompt. Press **<NO>** to resume the game in progress using the current data and exit the Menu. Press the down arrow key to scroll to the next selection.

Home Roster, Guest Roster

Home Roster and **Guest Roster** are entered in the same way. **Home Roster** is used as an example.

LCD Display	Action
MENU-ROSTER SELECT HOME	Press **<YES>** or the right or left arrow key to select the Home or Guest Roster submenu and show the first prompt on the LCD. Press **<NO>** to resume the game in progress using the current data and exit the Menu Press the down arrow key to scroll to the next selection.
HOME-TEAM NAME AAAAAAAAAAAAA*	**The TEAM NAME (LL-2441) insert must be inserted to enter the Team Name Message Center (TNMC) settings.** The TNMC is updated after each selection is completed. Use the **COLUMNS, ROWS** and **STROKE** keys to select the **WIDTH, HEIGHT** and **FONT** of the TNMC. The defaults are 48 columns, 8 rows and single stroke. Enter up to fifteen (15) characters for the team name and press **<ENTER>** **Reinsert the TENNIS (LL-2483) insert to continue.**

Display Menu

The **DISPLAY MENU** allows the user to start and edit the segment timer or to change the brightness of the scoreboard.

LCD Display	Action
MENU-MAIN ENTER DISPLAY MENU?	Press **<YES>** to select the Display submenu and show the first prompt on the LCD. Press the down arrow key to scroll to the next selection.
MENU-DISPLAY RUN SEG TIMER Y/N	**Note:** The segment timer function is disabled while the clock is running. Press **<YES>** to exit the sport code and run the segment timer program. Press **<NO>** or the down arrow key to scroll to the next selection.
EXIT GAME ARE YOU SURE Y/N	This prompt confirms that the user wants to exit the sport code and enter the segment timer **The SEGMENT TIMER (LL-2475) insert must be inserted to enter the Segment Timer settings.** Refer to **Section 3** for more information on the segment timer. Press **<YES>** to exit the sport code and run the segment timer program. Press **<NO>** or the down arrow key to scroll to the next selection.

(Continued on next page)

(Continued from previous page)

LCD Display	Action
MENU- DIMMING LEVEL (0-9): NN% NN = current level NONE = bright <0> 90% = <1> 80% = <2> 70% = <3> 60% = <4> 50% = <5> 40% = <6> 30% = <7> 20% = <8> 10% = <9>	Press <**0**> through <**9**> or use the arrow keys <🡐> <🡒>, to select the intensity for the digits on the scoreboard. Press <**NO**> to resume the game in progress using the current data, and exit the Menu. Press the down arrow key <🡓> to scroll to the next selection. **Note:** Dim levels pertain to outdoor LED products. Indoor LED and incandescent products only support one level of dimming at 50%**.**

Edit Settings

LCD Display	Action
MENU-MAIN EDIT SETTINGS?	Press **<YES>** or the right or left arrow key to select the Settings submenu and show the first prompt on the LCD. Refer to **Section 11.4 Settings.** Press **<NO>** to resume the game in progress using the current data and exit the Menu. Press the down arrow key to scroll to the next selection.

Time of Day

LCD Display	Action
MENU-MAIN SELECT TOD?	Press **<YES>** or the right arrow key to select the Time of Day submenu and show the first prompt on the LCD. Press **<NO>** to resume the game in progress using the current data and exit the Menu.
MENU-TIME OF DAY 1*12, 2-24 HOUR	Press **<1>** or **<2>** to display the time of day in 12 hour (default) or 24 hour format. Press **<ENTER>** or the down arrow key to scroll to the next selection.
MENU-TIME OF DAY TOD HH:MM:SS* HH:MM:SS = current setting	Enter the time of day in hours, minutes, and seconds using the selected format on the number pad and press **<ENTER>**. Press **<ENTER>** or the down arrow key to scroll to the next selection.
MENU-TIME OF DAY 1*GAME 2-TOD * = current setting	Press **<1>** or **<2>** to display the game clock (default) or the time of day clock on the scoreboard. Press the down arrow key to exit the Menu and return to the game.
MENU-TIME OF DAY BLANK GAME DATA?	If 2-tod is selected, this message will be displayed. Press **<ENTER>** to blank all game data on the scoreboard except for the Time of Day digits.

11.4 Settings

The following settings can be edited by the user when **EDIT SETTINGS** has been selected from the Main Menu.

Main Clock
Note 1: The settings entered for Main Clock are used with the **<SET MAIN CLOCK>** key.

Note 2: The period length is used differently depending on the direction of the main clock. For count down, the main clock is set to the selected length, decrements towards zero, and stops at zero. For count up, the main clock is set to zero, increments towards the selected length, and stops when the selected length is reached.

LCD Display	Action
MAIN CLOCK-TIME PERIOD MM:SS MM:SS = current setting	Enter the correct amount of time per period in minutes and seconds on the number pad and press **<ENTER>**. For example, 20:00 per period.

Switch Output
The All Sport 5000 series console has a switch that can be used to drive a number of different devices. The switch can be configured to operate under different settings. The default setting is 1-CLOCK= 0.

To display the switch settings that you want to select:

Press the number (0,1,2,3) key as a shortcut or use the left and right arrow keys to scroll to the desired setting.

Press **<YES>** to select the new setting.

Press **<NO>** or the down arrow key to leave the switch setting and display the next prompt (please refer to the table on the following page).

The possible settings for switch output are as follows:

Setting	Result
0 - DISABLED SWITCH OUTPUT=N 0-DISABLED? N = current setting	The switch remains open at all times and any external devices are disabled.
1-CLOCK = 0 SWITCH OUTPUT=N 1-CLOCK =0? N = current setting	In count down mode, the switch closes when the main clock reaches zero and remains closed until a nonzero value is entered. In count up mode, the switch closes when the main clock reaches the proper period, break, or overtime length and opens when any other value is entered.
2-CLOCK STOP SWITCH OUTPUT=N 2-CLOCK STOP? N = current setting	The switch closes when the main clock is stopped and opens when the main clock is running. External devices are disabled when the main clock is running.
3-MAIN HORN SWITCH OUTPUT=N 3-MAIN HORN? N = current setting	The switch closes when the main horn sounds. This could be when Auto Horn is enabled and the main clock reaches zero or when **<HORN>** is pressed.

Default Settings

Write the settings for this installation in the space (Custom) provided.

Setting	Default	Custom 1	Custom 2	Custom 3
Main Clock Period Length	00:00			
Switch Output	1-Clock = 0			

Section 12: Track Operations

Sport Insert: LL-2439

The Sport Insert drawing is located at the end of this section. The Team Name insert and Block Diagram drawings are located in **Appendix A**. The **Quick Reference** is located in **Appendix D**.

Reference Drawings:

Block Diagrams, A/S5000/3000, Outdoor Sports .....**Drawing A-124690**
Insert, Track .....**Drawing A-125094**
Insert, Team Name .....**Drawing A-125290**

Refer to the information in **Section 2** to start up the console and use the sport insert. Read **Section 2** carefully to fully understand the following operation instructions.

If an insert is lost or damaged, a copy of the insert drawing located at the end of this section can be used until a replacement can be ordered.

Use the labels provided in **Appendix B** to attach the correct code number label to the sport insert in the appropriate location. Write the code number in the space provided below.

Write the correct code number here.

Notes: The four-digit code displayed is the code that is currently selected. Code 8601 is the code for manual data input.

External Timer Codes 8602 - 8604

- External timers must have specific Baud rates entered into the Venus® 7000 computer when using RTD information. The different rates are noted with each external timer.
- Code 8602 is for interfacing with the PowerTime timer.
- The Scoreboard type setting in the PowerTime under initialization/scoreboard/type must be set to multi-line and 1. The baud rate must be changed to 9600 in the Venus 7000 computer.
- Code 8603 is for interfacing with the OmniSport® 1000 or OmniSport 6000.
- The "Current Loop Scoreboard Setting" under Setup / Comm. Ports on the OmniSport 6000 must be set to "SW-87/89, MS-167/169" if code 8603 is used with the OmniSport 6000 track timing program. The baud rate must be set to 12800 Baud in the Venus 7000 computer.
- Code 8604 is for interfacing with *Hawkeye* or *Finish Lynx* timers. The Baud rate for the *Hawkeye* and *Finish Lynx* timers must be set to 9600 Baud.

If you do not know the code number to enter for your scoreboard, refer to **Appendix B** in this manual. If you do not know the model number of your scoreboard, refer to the **Installation and Maintenance** manual provided with the scoreboard.

12.1 Track Keys

Reset

LCD Display	Action
TIME 0:05.15 ↑ ENTER TO RESET *N* = current setting	When **<RESET>** is pressed, the message "Enter to Reset" will appear on the bottom line of the LCD. Press **<ENTER>** to reset the main clock. **Note:** The **<RESET>** function is disabled while the clock is running. The **<RESET>** function is also disabled when an external timer code is selected.

Lane

LCD Display	Action
LANE *N* *N* = current setting	Press **<LANE>** to set the value of the lane digits on the scoreboard.
LANE: N EXTERNAL TIMER *N* = current setting	This message is displayed when an external timer code is selected. Use the external timer to modify the value.

Place

LCD Display	Action
PLACE:N N = current setting	Press **<PLACE>** to set the place of the runner in the lane specified on the scoreboard.
PLACE: N EXTERNAL TIMER N = current setting	This message is displayed when an external timer code is selected. Use the external timer to modify the value.

Home and Guest 1 Score

The Home and Guest 1 Score keys are used to modify the value of home or guest team score.

When the LCD Display is as shown, the following actions may be selected.

LCD Display	Action
TEAM SCORE-EDIT HOME NNN NNN = current setting	Enter the new value of score for the particular team and press **<ENTER>**. The LCD shows which key was pressed and the new value for the team score of the corresponding team.

Guest 2 and Guest 3 Score (Event/Heat)

The function of the Guest 2 and Guest 3 score keys depends on the **GUEST 2,3 VALUE** in **EDIT SETTINGS**. Refer to **Section 12.4**.

LCD Display	Action
EVENT - EDIT NNN NNN = current setting	If the value of Guest 2 and 3 in the settings menu is set to event/heat, **and** the manual timing code is selected the LCD will display the current event or heat number. Enter the new value and press **<ENTER>**. The Event Value is modified by the Guest 2 key and the Heat Value is modified by the Guest 3 key.
EVENT: NNN EXTERNAL TIMER NNN = current setting	This message is displayed on the LCD if an external timer code is selected **and** the value of Guest 2 and 3 in the settings menu is set to event/heat. **Note:** The event or heat value will be automatically updated to correspond with the external timer value if an external timer code is selected. Use the external timer to modify these values. To enter event heat information on the scoreboard without updates from the external timer, change the Guest 2,3 setting in the settings menu to "**SCORE**".
TEAM SCORE-EDIT GUEST 2 NNN	If the value of Guest 2 and 3 in the settings menu, is set to score, the LCD will display the current value of score for the corresponding team. Enter the new value and press **<ENTER>**.

Score +1

The home and guest 1 and 2 **<SCORE +1>** keys are used to increment the team score.

LCD Display	Action
TEAM SCORE-+1 HOME NNN *NNN* = current setting	Press the appropriate score key to increment or decrement the score for the home or guest team. The LCD shows which key was pressed and the new value for the team score of the corresponding team.

12.2 Edit

The **<EDIT>** key allows the user to select and edit the following scoreboard fields. Press **<EDIT>** and the key for the home or guest field to be edited.

Score +1

LCD Display	Action
TEAM SCORE-EDIT HOME NNN* *NNN* = current setting	Press **<EDIT>** and any of the **SCORE** keys for the home or guest team to display the current team score setting. Enter the correct team score on the number pad and press **<ENTER>**.

12.3 Menu

The **<MENU>** key allows the user to select from a list of options specific for each sport. The up and down arrow keys allow the user to scroll through the menu list. Pressing a key other than **<YES>**, **<NO>**, the arrow keys, and other allowed keys exits the Menu function.

The **MENU** function should be used at the beginning of each new game to edit the Home and Guest Rosters.

New Game

LCD Display	Action
MENU-MAIN NEW GAME?	Press **<YES>** to clear all of the program data for the last game played or the game in progress and begin running the selected sport. Press **<NO>** to resume the game in progress using the current data and exit the Menu. Press the down arrow key to scroll to the next selection.

New Code

LCD Display	Action
MENU-MAIN NEW CODE?	Press **<YES>** to begin selection of a new code from the **ENTER CODE** prompt. Press **<NO>** to resume the game in progress, using the current data, and exit the Menu. Press the down arrow key to scroll to the next selection.

Home Roster, Guest Roster

Home Roster and **Guest Roster** are entered in the same way. **Home Roster** is used as an example.

LCD Display	Action
MENU-ROSTER SELECT HOME	Press **<YES>** or the right or left arrow key to select the Home or Guest Roster submenu and show the first prompt on the LCD. Press **<NO>** to resume the game in progress using the current data and exit the Menu. Press the down arrow key to scroll to the next selection.

(Continued on next page)

(Continued from previous page)

LCD Display	Action
HOME-TEAM NAME AAAAAAAAAAAAA*	**The TEAM NAME (LL-2441) insert must be inserted to enter the Team Name Message Center (TNMC) settings.** The TNMC is updated after each selection is completed. Use the **COLUMNS, ROWS** and **STROKE** keys to select the **WIDTH, HEIGHT** and **FONT** of the TNMC. The defaults are 48 columns, 8 rows and single stroke. Enter up to fifteen (15) characters for the team name and press **<ENTER>.** **Reinsert the TRACK (LL-2439) insert to continue.**
HOME-TEAM ABBR AAAAAAAAA*	**The TEAM NAME (LL-2441) insert must be inserted to enter the Team Name Message Center (TNMC) settings.** The TNMC is updated after each selection is completed. Use the **COLUMNS, ROWS** and **STROKE** keys to select the **WIDTH, HEIGHT** and **FONT** of the TNMC. The defaults are 48 columns, 8 rows and single stroke. Enter up to fifteen (15) characters for the team abbreviation and press **<ENTER>.** **Reinsert the TRACK (LL-2439) insert to continue.**

Display Menu

The **DISPLAY MENU** allows the user to start and edit the segment timer or to change the brightness of the scoreboard.

LCD Display	Action
MENU-MAIN ENTER DISPLAY MENU?	Press **<YES>** to select the Display submenu and show the first prompt on the LCD. Press the down arrow key to scroll to the next selection.

(Continued from previous page)

LCD Display	Action
MENU-DISPLAY RUN SEG TIMER Y/N	**Note:** The segment timer function is disabled while the clock is running. Press **<YES>** to exit the sport code and run the segment timer program. Press **<NO>** or the down arrow key to scroll to the next selection.
EXIT GAME ARE YOU SURE Y/N	This prompt confirms that the user wants to exit the sport code and enter the segment timer **The SEGMENT TIMER (LL-2475) insert must be inserted to enter the Segment Timer settings.** Refer to **Section 3** for more information on the segment timer. Press **<YES>** to exit the sport code and run the segment timer program. Press **<NO>** or the down arrow key to scroll to the next selection.
MENU- DIMMING LEVEL (0-9): NN% NN = current level NONE = bright <0> 90% = <1> 80% = <2> 70% = <3> 60% = <4> 50% = <5> 40% = <6> 30% = <7> 20% = <8> 10% = <9>	Press **<0>** through **<9>** or use the arrow keys <🡐> <🡒>, to select the intensity for the digits on the scoreboard. Press <**NO**> to resume the game in progress using the current data, and exit the Menu. Press the down arrow key <🡓> to scroll to the next selection. **Note:** Dim levels pertain to outdoor LED products. Indoor LED and incandescent products only support one level of dimming at 50%.

Edit Settings

LCD Display	Action
MENU-MAIN EDIT SETTINGS?	Press **<YES>** or the right or left arrow key to select the Settings submenu and show the first prompt on the LCD. Refer to **Section 12.4**. Press **<NO>** to resume the game in progress using the current data and exit the Menu. Press the down arrow key to scroll to the next selection.

Time of Day

LCD Display	Action
MENU-MAIN SELECT TOD?	Press **<YES>** or the right arrow key to select the Time of Day submenu and show the first prompt on the LCD. Press **<NO>** to resume the game in progress using the current data and exit the Menu.
MENU-TIME OF DAY 1*12, 2-24 HOUR	Press **<1>** or **<2>** to display the time of day in 12 hour (default) or 24 hour format. Press **<ENTER>** or the down arrow key to scroll to the next selection.
MENU-TIME OF DAY TOD HH:MM:SS* HH:MM:SS = current setting	Enter the time of day in hours, minutes, and seconds using the selected format on the number pad and press **<ENTER>**. Press **<ENTER>** or the down arrow key to scroll to the next selection.

(Continued on next page)

(Continued from previous page)

LCD Display	Action
MENU-TIME OF DAY 1*GAME 2-TOD * = current setting	Press **<1>** or **<2>** to display the game clock (default) or the time of day clock on the scoreboard. Press the down arrow key to exit the Menu and return to the game.
MENU-TIME OF DAY BLANK GAME DATA?	If 2-tod is selected, this message will be displayed. Press **<ENTER>** to blank all game data on the scoreboard except for the Time of Day digits.

12.4 Settings

The following settings can be edited by the user when **EDIT SETTINGS** has been selected from the Main Menu.

Guest 2 and Guest 3 key function

LCD Display	Action
GUEST 2,3 VALUE SCORE←→EVNT/HT	This setting determines the function of the Guest 2 and Guest 3 keys. When the value is set to **EVNT/HT**, the scoreboard will display event/heat information. If an external timer code is selected, the Guest 2 and Guest 3 keys will be disabled and event/heat information will be taken from the external timer. When the value is set to **SCORE**, the scoreboard will display scores for guests 2 and 3 on the scoreboard. The scores will be obtained from the Guest 2 and Guest 3 keys on the keypad. The current value is shown by the location of the asterisk. Press the left or right arrow key to change the value to score or event/heat respectively.

(Continued on next page)

(Continued from previous page)

LCD Display	Action
	Notes: If Event/Heat is selected, the Event/Heat value will be updated automatically when an external timer code is used. Use the **SCORE** setting if you do not want the values to be updated externally in an external timer code.

Switch Output

The All Sport 5000 series console has a switch that can be used to drive a number of different devices. The switch can be configured to operate under different settings. The default setting is 1-CLOCK= 0.

To display the switch setting that you want to select:

- Press the number (0,1,2,3) key as a shortcut or use the left and right arrow keys to scroll to the desired setting.
- Press **<YES>** to select the new setting.
- Press **<NO>** or the down arrow key to leave the switch setting and display the next prompt.

The possible settings for the switch output are as follows:

Setting	Result
0 - DISABLED SWITCH OUTPUT=N 0-DISABLED? *N* = current setting	The switch remains open at all times and any external devices are disabled.
1-CLOCK = 0 SWITCH OUTPUT=N 1-CLOCK =0? *N* = current setting	In count down mode, the switch closes when the main clock reaches zero and remains closed until a nonzero value is entered. In count up mode, the switch closes when the main clock reaches the proper period, break, or overtime length and opens when any other value is entered.

(Continued on next page)

(Continued from previous page)

Setting	Result
2-CLOCK STOP SWITCH OUTPUT=N 2-CLOCK STOP? N = current setting	The switch closes when the main clock is stopped and opens when the main clock is running. External devices are disabled when the main clock is running.
3-MAIN HORN SWITCH OUTPUT=N 3-MAIN HORN? N = current setting	The switch closes when the main horn sounds. This could be when Auto Horn is enabled and the main clock reaches zero or when **<HORN>** is pressed.

Default Settings

Write the settings for this installation in the space (Custom) provided.

Setting	Default	Custom 1	Custom 2	Custom 3
Guest 2,3 Score or Event/Heat	Event/Heat			
Switch Output	1-Clock = 0			

Section 13: Volleyball Operations

Sport Insert: LL-2434

The Sport Insert drawing is located at the end of this section. The Team Name insert and Block Diagram drawings are located in **Appendix A**. The **Quick Reference** is located in **Appendix D**.

Reference Drawings:

Block Diagrams, A/S5000/3000, BB, VB & WR #1.....**Drawing A-124686**
Block Diagrams, A/S5000/3000, BB, VB & WR #3.....**Drawing A-124688**
Insert, Volleyball.....**Drawing A-125055**
Insert, Team Name .....**Drawing A-125290**
Block Diagrams, A/S5000/3000, BB, VB & WR #2.....**Drawing A-125415**

Refer to the information in **Section 2** to start up the console and use the sport insert. Read **Section 2** carefully to fully understand the following operation instructions.

If an insert is lost or damaged, a copy of the insert drawing located at the end of this section can be used until a replacement can be ordered.

Use the labels provided in **Appendix B** to attach the correct code number label to the sport insert in the appropriate location. Write the code number in the space provided below.

Write the correct code number here.

If you do not know the code number to enter for your scoreboard, refer to **Appendix B** in this manual. If you do not know the model number of your scoreboard, refer to the **Installation and Maintenance** manual provided with the scoreboard.

13.1 Volleyball Keys

Time Out On/Off

<TIME OUT ON/OFF> stops and starts the time out clock. The length of both the full and partial time outs can also be changed when the time out clock is stopped.

LCD Display	Action
TIME OUTS-SELECT FULL? MM:SS MM:SS = minutes, seconds	Press **<TIME OUT ON/OFF>** to display the configured time for full time out length. To accept the full time out length press **<YES>**. To decline the selection of the full time out length press **<NO>**. To change the full time out length, enter the new length in minutes and seconds on the number pad and press **<ENTER>**. Press **<CLEAR>** twice to clear changes and return to the game. **Notes:** Only the time outs configured in the **EDIT SETTINGS** function are displayed on the LCD and available for selection. The up and down arrow keys can also be used to select the full and partial time outs.

Time Out

The home and guest **<TIME OUT>** keys are used to decrement the number of time outs remaining and start the time out clock. The scoreboard indicator is turned on when the type of time out is selected (full or partial). The scoreboard indicator is turned off when the time out clock expires or is stopped.

Note 1: Only the types (full or partial) of time outs that were configured in the **EDIT SETTINGS** function are displayed on the LCD and available for selection.

Note 2: The up and down arrow keys can also be used to select the full and partial time outs (please refer to the table on the following page).

LCD Display	Action
TIME OUT-HOME FULL N N = current setting	Press **<TIME OUT>** to display the number of full time outs remaining. To accept the full time out and start the time out clock, press **<YES>**. Full time out decrements. To decline the selection of a full time out, press **<NO>**. Full time out does not decrement. **Note:** The up and down arrow keys can also be used to select the full and partial time outs.
TIME OUT-HOME PARTIAL N N = current setting	Press **<TIME OUT>** a second time to display the number of partial time outs remaining. To accept the partial time out and start the time out clock, press **<YES>**. Partial time out decrements. To decline the selection of a partial time out, press **<NO>**. Partial time out does not decrement. **Note:** The up and down arrow keys can also be used to select the full and partial time outs.
TIME OUT-HOME NO TIME OUTS	This message appears when there are no time outs left.

Match Number +1, Games +1

The **<MATCH NUMBER +1>**and **<GAMES +1>** keys are both used to increment their respective totals. **<GAME +1>** is used as an example.

LCD Display	Action
GAME NO.: -+1 N N = current setting	Press the appropriate key to increment statistics for the home or guest team. The LCD shows which key was pressed and the new value for the corresponding team.

Score +1, -1

The home and guest **<SCORE +1>** and **<SCORE -1>** keys are used to increment and decrement the team score.

LCD Display	Action
TEAM SCORE: +1 HOME NNN NNN = current setting	Press the appropriate score key to increment or decrement the score for the home or guest team. The LCD shows which key was pressed and the new value for the team score of the corresponding team.

Games Won +1

The home and guest keys are used to increment their respective totals.

LCD Display	Action
GAMES WON: +1 HOME NN NN = current setting	Press the **<GAMES WON +1>** key to increment the number of games won by the home or guest team. The LCD shows which key was pressed and the new value for the corresponding team.

Aces, Kills, Blocks, and Digs

The home and guest **<ACES +1>, <KILLS +1>, <BLOCKS +1>** and **<DIGS +1>** keys are all used to increment their respective totals. **<ACES +1>** is used as an example.

LCD Display	Action
ACES: +1 HOME NNN NNN = current setting	Press the appropriate key to increment statistics for the home or guest team. The LCD shows which key was pressed and the new value for the corresponding team.
ACES: +1 HOME PLAYER NN* NN = current setting	If the program is configured to update the player stats, this prompt displays asking for a player number. Enter the jersey number of the player who made the play and press **<ENTER>**.

(Continued on next page)

*(Continued from **previous** page)*

LCD Display	Action
HOME PLAYER NN NOT FOUND, ADD? NN = current setting	If the player is not in the roster, this prompt asks if the player should be added. Press <**YES**> to add the player to the roster and credit the play to that player. Press <**NO**> to decline the entry of the player number.
HOME PLAYER NN ROSTER FULL NN = current setting	This message displays when the answer to the previous prompt is YES and the roster is full.
HOME PLAYER NN ACES NN NN = current setting	The players number and number of points display if the player was found in the game or correctly added to the roster.

Serve

LCD Display	Action
HOME SERVE ON	Press the home or guest **<SERVE>** key, to turn on the possession indicator for that team.
HOME SERVE OFF	To turn off the possession indicator, press the same **<SERVE>** key a second time or press the opposite **<SERVE>** key.

In Game/Out of Game

The **<IN GAME>** and **<OUT OF GAME>** keys are only functional when the Home or Guest **<PLAYER>** key has been pressed.

Delete Player

The **<DELETE PLAYER>** key is only functional when the Home or Guest **<PLAYER>** key has been pressed.

Player

Note: If player stats are being received from DSTI the keys PLAYER, IND SUB, and MASS SUB will be disabled. The LCD will display the messages shown below when these keys are pressed.

LCD Display	Action
STATS RECEIVED KEY DISABLED EXIT STATS MODE Y/N?	The key disabled message will display for one second and then the <**EXIT STATS**> message will display and wait for a <**YES**> or <**NO**> key. If the <**YES**> key is pressed then stats data will be saved in the console and the console will <**EXIT STATS**> mode until another stats packet is received. This will allow the operator to enter player stats from the console if the DSTI feed is lost.

LCD Display	Action
HOME PLAYER NN* NN = current setting	When the home or guest **<PLAYER>** key is pressed, this prompt asks the jersey number of the player to be edited. Enter the jersey number on the number pad and press **<ENTER>**.
HOME PLAYER NN NOT FOUND, ADD? NN, DD = current settings	If the player is not in the roster, this prompt asks if the player should be added. Press **<YES>** to add the player to the roster. Press **<NO>** to decline the entry of the player number.
HOME PLAYER NN ROSTER FULL NN = current setting	This message displays when the answer to the previous prompt is YES and the roster is full.

(Continued on next page)

*(Continued from **previous** page)*

LCD Display	Action
HOME PLAYER NN S-N A-NN* K-NN NN = player number S-I = **in** game S-O = **out** of game A-NN = number of **aces** K-NN = number of **kills** B-NN = number of **blocks** D-NN = number of **digs**	If the player is found, the player's game status and statistics can be changed. **To change a player's statistics:** **1.** Use the up and down arrow keys to select the player from the list. **2.** Use the left and right arrow keys to select the statistic to be changed. The display shifts to show all of the statistic fields. **3.** Enter the correct number for the selected statistic on the number pad and press **<ENTER>**. **To change a player's game status:** **1.** Use the up and down arrow keys to select the player from the list. **2.** Press **<IN GAME>** or **<OUT OF GAME>**. **3.** The S field on the display changes to show the player's current status. Press **<CLEAR>** to exit the menu and return to the game.
HOME PLAYER NN DELETE PLAYER?	To delete an incorrect player from the roster use the up and down arrow keys to select the player from the list and press **<DELETE PLAYER>.** Press **<YES>** to remove the player from the roster. Press **<NO>** or **<CLEAR>** to decline the deletion process and return to the game.

Individual Substitution

LCD Display	Action
IND SUB-HOME NN* IN FOR NN* NN = current setting	When the home or guest **<INDIV. SUB.>** key is pressed, this prompt asks the jersey number of the player entering and leaving the game. Enter the jersey number of the player entering the game on the number pad and press **<ENTER>**. Enter the jersey number of the player leaving the game on the number pad and press **<ENTER>**.
IND SUB-HOME SUB OK	This message is displayed if no errors are found.
IND SUB-HOME SUB NOT MADE	This message is displayed for the following reasons: The player going into the game is already marked as in the game. The player coming out of the game is not marked as in the game.
IND SUB-HOME NOT FOUND NN NN = current setting	This message is displayed if the player going in or the player coming out of the game is not found in the roster. Press **<YES>** to correct the jersey number. Enter the correct jersey number and press **<ENTER>**.

Mass Substitution

LCD Display	Action
MASS SUB-HOME PLAYER 1 NN* NN = current setting	After the home or guest **<MASS SUB>** key is pressed, the LCD will display a message on the LCD asking for the first of six player numbers that are going into the game. Enter the jersey number on the number pad and press **<ENTER>** for each of the six players. Press **<CLEAR>** at any time to exit the Mass Substitution function. When the home or guest **<MASS SUB>** key is pressed, this prompt asks the jersey number of the first player entering the game. Enter the jersey number of the each of the six players entering the game on the number pad and press **<ENTER>**.
MASS SUB-HOME SUB OK	This message is displayed if no errors are found.
MASS SUB-HOME DUPLICATE NN NN = current setting	This message displays for each duplicate jersey number found for the six players going into the game. Press **<YES>** to correct the jersey number. Enter the correct jersey number and press **<ENTER>**.
MASS SUB-HOME NOT FOUND NN NN = current setting	This message displays for each player not found in the roster. Press **<YES>** to correct the jersey number. Enter the correct jersey number and press **<ENTER>**.

13.2 Edit

The **<EDIT>** key allows the user to select and edit the following scoreboard fields. Press **<EDIT>** and the key for the field to be edited.

Match Number +1, Games +1
The **<MATCH NUMBER +1>**and **<GAMES +1>** keys are edited in the same ways. **<GAME +1>** is used as an example.

LCD Display	Action
GAME NO: EDIT N* N = current setting	Press **<EDIT>** and the appropriate statistic key to display the current setting. Enter the correct number on the number pad and press **<ENTER>**.

Time Out

Note 1: Only the time outs configured in the **EDIT SETTINGS** function are displayed on the LCD and available for selection.

Note 2: The up and down arrow keys can also be used to select the full and partial time outs.

LCD Display	Action
TIME OUT-HOME FULL N* N = current setting	Press **<EDIT> <TIME OUT>** for the home or guest team to display the current setting of full time outs remaining. Enter the correct number of full time outs on the number pad and press **<ENTER>**.
TIME OUT-HOME PARTIAL N* N = current setting	Press **<EDIT> <TIME OUT>** for the home or guest team a second time or the down arrow key to display the current setting of full time outs remaining. Enter the correct number of partial time outs on the number pad and press **<ENTER>**.

Score +1, -1

LCD Display	Action
TEAM SCORE: EDIT HOME NNN* *NNN* = current setting	Press **<EDIT>** and either of the **SCORE** keys for the home or guest team to display the current team score setting. Enter the correct team score on the number pad and press **<ENTER>**.

Games Won +1

LCD Display	Action
GAMES WON: EDIT HOME NN* *N* = current setting	Press **<EDIT> <GAMES WON +1>** for the home or guest team to display the current setting of games won. Enter the correct number of games won on the number pad and press **<ENTER>**.

Aces, Kills, Blocks, and Digs

The home and guest **<ACES +1>, <KILLS +1>, <BLOCKS +1>,** and **<DIGS +1>** keys are all edited in the same way. **<ACES +1>** is used as an example.

LCD Display	Action
ACES: EDIT HOME NNN* *NNN* = current setting	Press **<EDIT>** and the appropriate statistic key to display the current setting. Enter the correct number on the number pad and press **<ENTER>**.
ACES: EDIT HOME PLAYER NN* *NN* = current setting	If the program is configured to update the player stats, this prompt displays asking for a player number. Enter the jersey number of the player who scored the points and press **<ENTER>**.

Time Out On/Off

LCD Display	Action
TIME OUTS-EDIT FULL MM:SS MM:SS = minutes, seconds	Press **<EDIT> <TIME OUT ON/OFF>** to display the current time setting for full time outs. Enter the correct time on the number pad and press **<ENTER>**.
TIME OUT- EDIT PARTIAL MM:SS MM:SS = minutes, seconds	Press **<TIME OUT ON/OFF>** a second time or the down arrow key to display the configured time for partial time out length. Enter the correct time on the number pad and press **<ENTER>**.

13.3 Menu

The **<MENU>** key allows the user to select from a list of options specific for each sport. The up and down arrow keys allow the user to scroll through the menu list. Pressing a key other than **<YES>**, **<NO>**, the arrow keys, and other allowed keys exits the Menu function.

The **MENU** function should be used at the beginning of each new game to edit the Home and Guest Rosters.

New Game
When the LCD Display is as shown, the following actions may be selected.

LCD Display	Action
MENU-MAIN NEW GAME?	Press **<YES>** to clear all of the program data for the last game played or the game in progress and begin running the selected sport. Press **<NO>** to resume the game in progress using the current data and exit the Menu. Press the down arrow key to scroll to the next selection.

New Code

LCD Display	Action
MENU-MAIN NEW CODE?	Press **<YES>** to begin selection of a new code from the ENTER CODE prompt. Press **<NO>** to resume the game in progress using the current data and exit the Menu. Press the down arrow key to scroll to the next selection.

Home Roster, Guest Roster

Home Roster and **Guest Roster** are entered in the same way. **Home Roster** is used as an example.

LCD Display	Action
MENU-ROSTER SELECT HOME	Press **<YES>** or the right or left arrow key to select the Home or Guest Roster submenu and show the first prompt on the LCD. Press **<NO>** to resume the game in progress using the current data and exit the Menu. Press the down arrow key to scroll to the next selection.
HOME-TEAM NAME AAAAAAAAAAAAA*	**The TEAM NAME (LL-2441) insert must be inserted to enter the Team Name Message Center (TNMC) settings.** The TNMC is updated after each selection is completed. Use the **COLUMNS, ROWS** and **STROKE** keys to select the **WIDTH, HEIGHT** and **FONT** of the TNMC. The defaults are 48 columns, 8 rows and single stroke. Enter up to fifteen (15) characters for the team name and press **<ENTER>** **Reinsert the VOLLEYBALL (LL-2434) insert to continue.**

(Continued from previous page)

LCD Display	Action
HOME-TEAM ABBR AAAAAAAAAA*	**The TEAM NAME (LL-2441) insert must be inserted to enter the Team Name Message Center (TNMC) settings.** The TNMC is updated after each selection is completed. Use the **COLUMNS, ROWS** and **STROKE** keys to select the **WIDTH, HEIGHT** and **FONT** of the TNMC. The defaults are 48 columns, 8 rows and single stroke. Enter up to ten (10) characters for the team abbreviation and press <**ENTER**>. **Reinsert the VOLLEYBALL (LL-2434) insert to continue.**
MENU-HOME PLAYER 01 NN* NN = current setting	Enter the jersey number for that player from the official roster and press **<ENTER>**. The next player is shown on the LCD. Continue entering the jersey numbers for up to 15 players. Press the **<CLEAR>** key to advance to the next option.
MENU-HOME CLEAR STATS?	This function clears all game statistics and should only be used before the start of a game. Press **<YES>** to clear the in-game status, fouls, and points for all players in the home roster. Press **<NO>** to decline the selection. Press the down arrow key to scroll to the next selection.

Display Menu

The **DISPLAY MENU** allows the user to start and edit the segment timer or to change the brightness of the scoreboard.

LCD Display	Action
MENU-MAIN ENTER DISPLAY MENU?	Press **<YES>** to select the Display submenu and show the first prompt on the LCD. Press the down arrow key to scroll to the next selection.
MENU-DISPLAY RUN SEG TIMER Y/N	**Note:** The segment timer function is disabled while the clock is running. Press **<YES>** to exit the sport code and run the segment timer program. Press **<NO>** or the down arrow key to scroll to the next selection.
EXIT GAME ARE YOU SURE Y/N	This prompt confirms that the user wants to exit the sport code and enter the segment timer **The SEGMENT TIMER (LL-2475) insert must be installed to enter the Segment Timer settings.** Refer to **Section 3** for extra information on the segment timer. Press **<YES>** to exit the sport code and run the segment timer program. Press **<NO>** or the down arrow key to scroll to the next selection.

(Continued on nest page)

*(Continued from **previous** page)*

LCD Display	Action
MENU- DIMMING LEVEL (0-9): NN% NN = current level NONE = bright <0> 90% = <1> 80% = <2> 70% = <3> 60% = <4> 50% = <5> 40% = <6> 30% = <7> 20% = <8> 10% = <9>	Press **<0>** through **<9>** or use the arrow keys <🡐> <🡒>, to select the intensity for the digits on the scoreboard. Press <**NO**> to resume the game in progress using the current data, and exit the Menu. Press the down arrow key <🡓> to scroll to the next selection. **Note:** Dim levels pertain to outdoor LED products. Indoor LED and incandescent products only support one level of dimming at 50%.

Edit Settings

LCD Display	Action
MENU-MAIN EDIT SETTINGS?	Press **<YES>** or the right or left arrow key to select the Settings submenu and show the first prompt on the LCD. Refer to **Section 13.4**. Press **<NO>** to resume the game in progress using the current data and exit the Menu. Press the down arrow key to scroll to the next selection.

Time of Day

LCD Display	Action
MENU-MAIN SELECT TOD?	Press **<YES>** or the right arrow key to select the Time of Day submenu and show the first prompt on the LCD. Press **<NO>** to resume the game in progress using the current data and exit the Menu.
MENU-TIME OF DAY 1*12, 2-24 HOUR	Press **<1>** or **<2>** to display the time of day in 12 hour (default) or 24 hour format. Press **<ENTER>** or the down arrow key to scroll to the next selection.
MENU-TIME OF DAY TOD HH:MM:SS* HH:MM:SS = current setting	Enter the time of day in hours, minutes, and seconds using the selected format on the number pad and press **<ENTER>**. Press **<ENTER>** or the down arrow key to scroll to the next selection.
MENU-TIME OF DAY 1*GAME 2-TOD * = current setting	Press **<1>** or **<2>** to display the game clock (default) or the time of day clock on the scoreboard. Press the down arrow key to exit the Menu and return to the game.
MENU-TIME OF DAY BLANK GAME DATA?	If 2-tod is selected, this message will be displayed. Press **<ENTER>** to blank all game data on the scoreboard except for the Time of Day digits.

13.4 Settings

The following settings can be edited by the user when **EDIT SETTINGS** has been selected from the Main Menu.

Main Clock

Note 1: The settings entered for Main Clock are used with the **<SET MAIN CLOCK>** key.

Note 2: The period, break, and overtime lengths are used differently depending on the direction of the main clock. For count down, the main clock is set to the selected length, decrements towards zero, and stops at zero. For count up, the main clock is set to zero, increments towards the selected length, and stops when the selected length is reached.

LCD Display	Action
MAIN CLOCK-MODE TENTH SECOND? N *N* = current setting	When the main clock is set to count down and tenths of a second is selected, the main clock displays in tenths of a second remaining when the time is below one minute. Press **<YES>** to set the main clock to display tenths of a second. Press **<NO>** to display whole seconds.
MAIN CLOCK-TIME PERIOD MM:SS *MM:SS* = current setting	Enter the correct amount of time per period in minutes and seconds on the number pad and press **<ENTER>**. For example, 60:00 per game.
MAIN CLOCK-TIME BREAK MM:SS *MM:SS* = current setting	Set the amount of time for the breaks between games. Enter the correct amount of time for breaks in minutes and seconds on the number pad and press **<ENTER>**. For example, 3:00.

Time Outs

Note 1: If a full or partial time out is not needed for the HOME or GUEST **<TIME OUT>** keys, enter zero for the number of time outs.

Note 2 If a full or partial time out is not needed for **<TIME OUT ON/OFF>,** enter zero for the time.

LCD Display	Action
TIME OUTS-MODE FULL N* N = current setting	Enter the number of full time outs on the number pad and press **<ENTER>**.
TIME OUTS-TIME FULL MM:SS* MM:SS = current setting	Enter the amount of time for a full time out in minutes and seconds on the number pad and press **<ENTER>**. For example, 0:30.
TIME OUTS-MODE WARNING MM:SS* MM:SS = current setting	A warning horn can be configured to signal the end of a full/partial time out. While the time out clock is counting down, the horn will sound for one second when the warning time is reached. Enter a zero for the time to disable the warning horn. Enter the time in minutes and seconds on the number pad and press **<ENTER>**.
TIME OUTS-MODE PARTIAL N* N = current setting	Enter the number of partial time outs on the number pad and press **<ENTER>**.
TIME OUTS-TIME PARTIAL MM:SS* MM:SS = current setting	Enter the amount of time for a partial time out in minutes and seconds on the number pad and press **<ENTER>**. For example, 00:20
TIME OUTS-MODE SHOW ON MAIN? N N = current setting	Press **<YES>** to display the time out time on the LCD and the main clock digits of the scoreboard while the time out clock is active. Press **<NO>** to display the time out time on the LCD only.

Team Stats
UPDATE PLAYER?
UPDATE PLAYER? allows the entry of a player number after the home or guest team aces, kills, blocks or digs are incremented or decremented. This feature must be enabled for all player-foul-points panels.

LCD Display	Action
TEAM STATS-MODE UPDATE PLAYER? N *N* = current setting	This feature must be enabled for all player-foul-points panels. Press **<YES>** to allow entry of a player number after the home or guest team aces, kills, blocks or digs are incremented or decremented. Press **<NO>** to prevent entry of a player number.

User Def 1 and User Def 2
User Def 1 and **User Def 2** are used to define which statistics (aces, kills, blocks or digs) are displayed on the scoreboard. Only two of the four statistics can be selected to display on the player-foul-points panels for the individual players in the game.

- **User Def 1** displays the statistics in the Team Score digits.
- **User Def 2** displays the statistics in the Player/Foul digits.

User Def 1 and **User Def 2** are entered in the same way. **User Def 1** is used as an example. Press the number (1,2,3,4) key as a shortcut or use the left and right arrow keys to scroll to the desired setting.

LCD Display	Action
USER DEF 1 = N 1 - ACES *N* = current setting *USER DEF 1* = Team Score *USER DEF 1* = Player/Foul	Press **<1>** or use the left and right arrow keys to scroll to **ACES**. Press **<YES>** to display **ACES** on the scoreboard. Press **<NO>** to decline the selection and return to the game. Press the down arrow key to scroll to the next selection.

(Continued on next page)

*(Continued from **previous** page)*

LCD Display	Action
USER DEF 1 = N 2 - KILLS N = current setting USER DEF 1 = Team Score USER DEF 1 = Player/Foul	Press **<2>** or use the left and right arrow keys to scroll to **KILLS**. Press **<YES>** to display **KILLS** on the scoreboard. Press **<NO>** to decline the selection and return to the game. Press the down arrow key to scroll to the next selection.
USER DEF 1 = N 3 - BLOCKS N = current setting USER DEF 1 = Team Score USER DEF 1 = Player/Foul	Press **<3>** or use the left and right arrow keys to scroll to **BLOCKS**. Press **<YES>** to display **BLOCKS** on the scoreboard. Press **<NO>** to decline the selection and return to the game. Press the down arrow key to scroll to the next selection.
USER DEF 1 = N 4 - DIGS N = current setting USER DEF 1 = Team Score USER DEF 1 = Player/Foul	Press **<4>** or use the left and right arrow keys to scroll to **DIGS**. Press **<YES>** to display **DIGS** on the scoreboard. Press **<NO>** to decline the selection and return to the game. Press the down arrow key to scroll to the next selection.

Select Captions

LCD Display	Action
	This menu option allows for the controlled backlit captions to be turned ON/OFF. Press the <**1**> key to select ON and OFF for captions controlled by control #1. Press the <**2**> key to select ON and OFF for captions controlled by control #2.

Switch Output

The All Sport 5000 series console has a switch that can be used to drive a number of different devices. The switch can be configured to operate under different settings. The default setting is 1-CLOCK= 0.

To display the switch setting that you want to select:

Press the number (0,1,2,3) key as a shortcut or use the left and right arrow keys to scroll to the desired setting.

Press **<YES>** to select the new setting.

Press **<NO>** or the down arrow key to leave the switch setting and display the next prompt.

The possible settings for the switch output are as follows:

Setting	Result
0 - DISABLED SWITCH OUTPUT=N 0-DISABLED? N = current setting	The switch remains open at all times and any external devices are disabled.
1-CLOCK = 0 SWITCH OUTPUT=N 1-CLOCK =0? N = current setting	In count down mode, the switch closes when the main clock reaches zero and remains closed until a nonzero value is entered. In count up mode, the switch closes when the main clock reaches the proper period, break, or overtime length and opens when any other value is entered.
2-CLOCK STOP SWITCH OUTPUT=N 2-CLOCK STOP? N = current setting	The switch closes when the main clock is stopped and opens when the main clock is running. External devices are disabled when the main clock is running.
3-MAIN HORN SWITCH OUTPUT=N 3-MAIN HORN? N = current setting	The switch closes when the main horn sounds. This could be when Auto Horn is enabled and the main clock reaches zero or when **<HORN>** is pressed.

Default Settings

Write the settings for this installation in the space (Custom) provided.

Setting	Default	Custom 1	Custom 2	Custom 3
Period Length	60:00			
Break Length	3:00			
Update Player	No			
User Def 1	Aces			
User Def 2	Kills			
Full Time Outs	2			
Full Time Out	0:30			
Partial Time Outs	0			
Partial Time Out	0:00			
Main Clock Mode Tenths	N			
Switch Output	1-Clock = 0			

Section 14: Wrestling Operations

Sport Insert: LL-2435

The Sport Insert drawing is located at the end of this section. The Team Name insert and Block Diagram drawings are located in **Appendix A**. The **Quick Reference** is located in **Appendix D**.

Reference Drawings:

Block Diagrams, A/S5000/3000, BB, VB & WR #1.....**Drawing A-124686**
Block Diagrams, A/S5000/3000, BB, VB & WR #3.....**Drawing A-124688**
Insert, Wrestling .....**Drawing A-124701**
Insert, Team Name .....**Drawing A-125290**
Block Diagrams, A/S5000/3000, BB, VB & WR #2.....**Drawing A-125415**

Refer to the information in **Section 2** to start up the console and use the sport insert. Read **Section 2** carefully to fully understand the following operation instructions.

If an insert is lost or damaged, a copy of the insert drawing located at the end of this section can be used until a replacement can be ordered.

Use the labels provided in **Appendix B** to attach the correct code number label to the sport insert in the appropriate location. Write the code number in the space provided below.

Write the correct code number here.

If you do not know the code number to enter for your scoreboard, refer to **Appendix B** in this manual. If you do not know the model number of your scoreboard, refer to the **Installation and Maintenance** manual provided with the scoreboard.

14.1 Wrestling Keys

Match Number +1

LCD Display	Action
MATCH- +1 N N = current setting	Press **<MATCH +1>** to increment the match number. A prompt showing match number displays briefly.
WEIGHT CLASS 01 NNN NNN =weight class	If weight classes are selected, a prompt to select a weight class will be shown on the LCD. Use the arrow keys to select a weight class, and press **<ENTER>**. The weight class displays in the Match digits.

Period +1

LCD Display	Action
PERIOD +1 N N = current setting	Press **<PERIOD +1>** to increment the quarter number. A prompt showing period number displays briefly. The period time will be set to the configured period time if the current time is at zero. There are 5 configured period times and the time will be set based on the current period number. If the current time was set before the <**PERIOD +1>** key is pressed, the time will not be adjusted.

Set Main Clock (Period Times)

LCD Display	Action
MAIN CLOCK -SET CURR MM:SS.T* MM:SS.T = minutes, seconds, tenths of a second	After the main clock has been stopped, press <**SET MAIN CLOCK**> to display the current time of the main clock. To change the time, enter the desired time on the number pad and press <**ENTER**>. Press <**CLEAR**> twice to clear changes and return to the game.
MAIN CLOCK -EDIT PERIOD MM:SS* MM:SS = minutes, seconds MAIN CLOCK -EDIT PER 2 MM:SS* MAIN CLOCK -EDIT PER 3 MM:SS* MAIN CLOCK -EDIT PER 4 MM:SS* MAIN CLOCK -EDIT PER 5 MM:SS*	Press <**SET MAIN CLOCK**> a second, third, fourth, fifth or sixth time or the down arrow key to display the configured time for each clock period length. To accept the displayed period length press <**YES**>. To decline the selection of the period length press <**NO**>. To change the period length and set the main clock enter the new time in minutes and seconds on the number pad and press <**ENTER**>. Press <**CLEAR**> twice to clear changes and return to the game.

Home Advantage, Guest Advantage, Stop Advantage Clock

LCD Display	Action
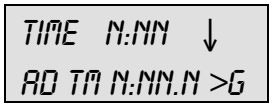 N:NN = main clock N:NN.N = advantage timer G or H = guest or home	The main clock must be running to use the advantage timer. Press the **<HOME (GREEN) ADVANTAGE>** or **<GUEST (RED) ADVANTAGE>** key to start the advantage timer for the competitor that has control of the match. The competitor that has the net (most) advantage time is shown on the LCD display (<H or >G). The timer (AD TM on the display) counts up or down depending on which competitor is in control (last advantage key pressed) and which competitor has the net (most) advantage time. For example: If the home competitor is the first to control the match, press **<HOME (GREEN) ADVANTAGE>.** The display shows <H and the timer (AD TM) counts up. When the guest competitor gains control, press **<GUEST (RED) ADVANTAGE>.** The display continues to show <H (because home still has the net advantage) but the timer (AD TM) counts down. The timer continues to count down until the **<HOME (GREEN) ADVANTAGE>** is pressed again or the timer reaches zero. If zero is reached the display shows >G (which now has the net advantage) and the timer counts up. Press the **<STOP ADVANTAGE CLOCK>** key to stop the advantage timer when neither competitor is in control.

Team Score +1, -1

LCD Display	Action
TEAM SCORE- +1 HOME = N *N* = current setting	Press **<SCORE +1>** or **<SCORE -1>** to increment or decrement the home or guest team score. A prompt showing total score will display briefly. Pressing a <**TEAM SCORE**> key will cause the team scores to show up on the LCD (TM will show on the LCD to indicate this). Pressing a **<MATCH SCORE>** key will cause the match scores to show on the LCD (MAT will show up on the LCD to indicate this).

Match Score +1, +2, +3, -1

The home and guest **<MATCH SCORE +1>, <MATCH SCORE +2>,** and **<MATCH SCORE +3>** keys are used to increment the team score and the **<MATCH SCORE -1>** key is used to decrement the team score.

LCD Display	Action
MATCH SCORE-+1 HOME NNN *NNN* = current setting	Press the appropriate score key to increment or decrement the score for the home or guest team. The LCD shows which key was pressed and the new value for the team score of the corresponding team. Pressing a **<MATCH SCORE>** key will cause the match scores to show on the LCD (MAT will show up on the LCD to indicate this). Pressing a <**TEAM SCORE**> key will cause the team scores to show up on the LCD (TM will show on the LCD to indicate this).

Start/Stop Injury Time

LCD Display	Action
G INJURY N:NN AD TM N:NN.N >G N:NN = injury timer N:NN.N = advantage timer G or H = guest or home	The maximum allowed injury time is set for each competitor at the beginning of a match and reset to this time when the Reset Match function is performed. When enabled, the injury times are displayed in the main clock digits and the corresponding (home or guest) match score digits flash. The main clock must be stopped to use the injury timer. Press **<START INJURY TIME>** to start the injury timer for the home or guest competitor. The injury timer counts down from the maximum allowed time until **<STOP INJURY TIME>** is pressed or 0:00 is reached. The injury time is shown on the LCD display with H for home or G for guest. Press the **<STOP INJURY TIME>** key to stop the injury timer and return the period time to the main clock digits. A key press is required before the main clock digits return to period time. This gives the coach time to see how much injury time remains.

Reset Match

LCD Display	Action
RESET MATCH?	Press **<YES>** to clear all of the data for the last match or the match in progress and begin a new individual match. Press **<NO>** to resume the match in progress using the current data and exit the Menu.
SELECT WIN HOME	If weight classes are selected, it will ask for the winner. Use the arrow keys to select HOME or GUEST, and press **<ENTER>**. Enter the points for the win, and press **<ENTER>**. The console will advance to the next weight class and display Match digits.

LCD Display	Action
TOD 11:36:23 ET	The console will display the time of day, elapsed time of match, and points scored in the match. This will display until a key is pressed.

Start/Stop Blood Time

LCD Display	Action
G BLOOD N:NN AD TM N:NN.N >G N:NN = blood timer N:NN.N = advantage timer G or H = guest or home	The maximum allowed blood time is set for each competitor at the beginning of a match and reset to this time when the Reset Match function is performed. When enabled, the blood times are displayed in the main clock digits and the corresponding (home or guest) match score digits flash. The main clock must be stopped to use the blood timer. Press **<START BLOOD TIME>** to start the blood timer for the home or guest competitor. The injury/blood timer counts down from the maximum allowed time until **<STOP BLOOD TIME>** is pressed or 0:00 is reached. The blood time is shown on the LCD display with H for home or G for guest. Press the **<STOP BLOOD TIME>** key to stop the blood timer and return the period time to the main clock digits. A key press is required before the main clock digits return to period time. This gives the coach time to see how much blood time remains.

Start/Stop Recovery Time

LCD Display	Action
RECOVERY N:NN AD TM N:NN.N >G N:NN = recovery timer N:NN.N = advantage timer	The recovery time is set to the configured recovery time for each competitor when the **<START RECOVERY TIME>** key is pressed. When enabled, the recovery times are displayed in the main clock digits and the corresponding (home or guest) match score digits flash. The main clock must be stopped to use the recovery timer. Press **<START RECOVERY TIME>** to start the recovery timer for the home or guest competitor. The recovery timer counts down from the maximum allowed time until **<STOP RECOVERY TIME>** is pressed or 0:00 is reached. Press the **<STOP RECOVERY TIME>** key to stop the recovery timer and return the period time to the main clock digits.

14.2 Edit

The **<EDIT>** key allows the user to select and edit the following scoreboard fields. Press **<EDIT>** and the key for the home or guest field to be edited.

Home Advantage, Guest Advantage

LCD Display	Action
AD TM HOME MM:SS.T* MM:SS.T = minutes, seconds, tenths of a second	Press **<EDIT> <HOME ADVANTAGE>** to display the current advantage time for the home competitor. Enter the advantage time for the home competitor on the number pad and press **<ENTER>**. Press **<CLEAR>** twice to clear changes and return to the game.

Guest Advantage

When the LCD Display is as shown, the following actions may be selected.

LCD Display	Action
AD TM GUEST MM:SS.T* MM:SS.T = minutes, seconds, tenths of a second	Press **<EDIT> <GUEST ADVANTAGE>** to display the current advantage time for the guest competitor. Enter the advantage time for the guest competitor on the number pad and press **<ENTER>**. Press **<CLEAR>** twice to clear changes and return to the game.

Blood Time

LCD Display	Action
BLOOD TIME-EDIT HOME MM:SS* MM:SS = current setting	Press **<EDIT>** and either of the **BLOOD TIME** keys for the home or guest team to display the current blood time setting. Enter the maximum allowed blood time in minutes and seconds on the number pad and press the < **ENTER** > key. For example, 5:00.

Injury Time

LCD Display	Action
INJURY TIME-EDIT HOME MM:SS* MM:SS = current setting	Press **<EDIT>** and either of the **INJURY TIME** keys for the home or guest team to display the current injury time setting. Enter the maximum allowed injury time in minutes and seconds on the number pad and press the <**ENTER**> key. For example, 5:00.

Match Number, Period, Team Score and Match Score

The home and guest **<MATCH NUMBER +1>, <PERIOD +1>, <TEAN SCORE+1, -1>** and **<MATCH SCORE +1, +2, +3, -1>** keys are all edited in the same way. **Team Score** is used as an example.

LCD Display	Action
  NNN = current setting	Press **<EDIT>** and the appropriate statistic key to display the current setting. For example, **<TEAM SCORE +1, -1>.** Enter the correct number on the number pad and press **<ENTER>**.

14.3 Menu

The **<MENU>** key allows the user to select from a list of options specific for each sport. The up and down arrow keys allow the user to scroll through the menu list. Pressing a key other than **<YES>**, **<NO>**, the arrow keys, and other allowed keys, exits the Menu function.

The **MENU** function should be used at the beginning of each new game to edit the Home and Guest Rosters.

New Game

LCD Display	Action
MENU-MAIN NEW GAME?	Press **<YES>** to clear all of the program data for the last game played or the game in progress and begin running the selected sport. Press **<NO>** to resume the game in progress using the current data and exit the Menu. Press the down arrow key to scroll to the next selection.

New Code

LCD Display	Action
MENU-MAIN NEW CODE?	Press **<YES>** to begin selection of a new code from the **ENTER CODE** prompt. Press **<NO>** to resume the game in progress using the current data and exit the Menu. Press the down arrow key to scroll to the next selection

Home Roster, Guest Roster

Home Roster and **Guest Roster** are entered in the same way. **Home Roster** is used as an example.

LCD Display	Action
MENU-ROSTER SELECT HOME	Press **<YES>** or the right or left arrow key to select the Home or Guest Roster submenu and show the first prompt on the LCD. Press **<NO>** to resume the game in progress using the current data and exit the Menu. Press the down arrow key to scroll to the next selection.
HOME-TEAM NAME AAAAAAAAAAAA*	**The TEAM NAME (LL-2441) insert must be inserted to enter the Team Name Message Center (TNMC) settings.** The TNMC is updated after each selection is completed. Use the **COLUMNS, ROWS** and **STROKE** keys to select the **WIDTH, HEIGHT** and **FONT** of the TNMC. The defaults are 48 columns, 8 rows and single stroke. Enter up to fifteen (15) characters for the team name and press **<ENTER>**. Reinsert the WRESTLING (LL-2435) insert to continue.
HOME-TEAM ABBR AAAAAAAAAA*	**The TEAM NAME (LL-2441) insert must be inserted to enter the Team Name Message Center (TNMC) settings.** The TNMC is updated after each selection is completed. Use the **COLUMNS, ROWS** and **STROKE** keys to select the **WIDTH, HEIGHT** and **FONT** of the TNMC. The defaults are 48 columns, 8 rows and single stroke. Enter up to ten (10) characters for the team abbreviation and press <**ENTER**>. **Reinsert the WRESTLING (LL-2435) insert to continue.**

Display Menu

The **DISPLAY MENU** allows the user to start and edit the segment timer or to change the brightness of the scoreboard.

LCD Display	Action
MENU-MAIN ENTER DISPLAY MENU?	Press **<YES>** to select the Display submenu and show the first prompt on the LCD. Press the down arrow key to scroll to the next selection.
MENU-DISPLAY RUN SEG TIMER Y/N	**Note:** The segment timer function is disabled while the clock is running. Press **<YES>** to exit the sport code and run the segment timer program. Press **<NO>** or the down arrow key to scroll to the next selection.
EXIT GAME ARE YOU SURE Y/N	This prompt confirms that the user wants to exit the sport code and enter the segment timer. **The SEGMENT TIMER (LL-2475) insert must be inserted to enter the Segment Timer settings.** Refer to **Section 3** for more information on the segment timer. Press **<YES>** to exit the sport code and run the segment timer program. Press **<NO>** or the down arrow key to scroll to the next selection.

(Continued on next page)

(Continued from previous page)

LCD Display	Action
MENU- DIMMING LEVEL (0-9): NN% NN = current level NONE = bright <0> 90% = <1> 80% = <2> 70% = <3> 60% = <4> 50% = <5> 40% = <6> 30% = <7> 20% = <8> 10% = <9>	Press **<0>** through **<9>,** or use the arrow keys <🡐> <🡒>, to select the intensity for the digits on the scoreboard. Press <**NO**> to resume the game in progress using the current data, and exit the Menu. Press the down arrow key <🡓> to scroll to the next selection. **Note:** Dim levels pertain to outdoor LED products. Indoor LED and incandescent products only support one level of dimming at 50%.

Weight Class

The **WEIGHT CLASS MENU** allows the user to enter the weight class values.

LCD Display	Action
WEIGHT CLASS 01* NNN WIN NNN = weight class	You may enter a total of 14 weight classes. Use the up and down (↑/↓) arrow keys to select the index of the weight class to edit, and press <**ENTER**>.
WEIGHT CLASS 01 NNN * WIN	Enter a new value for the weight class and press <**ENTER**>.
WEIGHT CLASS 01 NNN WIN *	You can set the winner of this weight class here. This would be used mainly for editing a winner that was set to the wrong side. Use the arrow keys to select H or G as the winner and press <**ENTER**>.
WEIGHT CLASS 01 NNN WIN H2*	Enter the score for the winner and press <**ENTER**>. Press <**ESC**> or <**MENU**> to exit from the weight class settings.

Edit Settings

LCD Display	Action
MENU-MAIN EDIT SETTINGS?	Press **<YES>** or the right or left arrow key to select the Settings submenu and show the first prompt on the LCD. Refer to **Section 14.4**. Press **<NO>** to resume the game in progress using the current data and exit the Menu. Press the down arrow key to scroll to the next selection.

Time of Day

LCD Display	Action
MENU-MAIN SELECT TOD?	Press **<YES>** or the right arrow key to select the Time of Day submenu and show the first prompt on the LCD. Press **<NO>** to resume the game in progress using the current data and exit the Menu.
MENU-TIME OF DAY 1*12, 2-24 HOUR	Press **<1>** or **<2>** to display the time of day in 12 hour (default) or 24 hour format. Press **<ENTER>** or the down arrow key to scroll to the next selection.
MENU-TIME OF DAY TOD HH:MM:SS* HH:MM:SS = current setting	Enter the time of day in hours, minutes, and seconds using the selected format on the number pad and press **<ENTER>**. Press **<ENTER>** or the down arrow key to scroll to the next selection.

(Continued on next page)

(Continued from previous page)

LCD Display	Action
MENU-TIME OF DAY 1*GAME 2-TOD * = current setting	Press **<1>** or **<2>** to display the game clock (default) or the time of day clock on the scoreboard. Press the down arrow key to exit the Menu and return to the game.
MENU-TIME OF DAY BLANK GAME DATA?	If 2-tod is selected, this message will be displayed. Press **<ENTER>** to blank all game data on the scoreboard except for the Time of Day digits.

14.4 Settings

The user can edit the following settings when **EDIT SETTINGS** has been selected from the Main Menu.

Main Clock

Note 1: The settings entered for **Main Clock** are used with the **<SET MAIN CLOCK>** key.

Note 2: The period, break, and overtime lengths are used differently depending on the direction of the main clock. For count down, the main clock is set to the selected length, decrements towards zero, and stops at zero. For count up, the main clock is set to zero, increments towards the selected length, and stops when the selected length is reached.

LCD Display	Action
MAIN CLOCK-TIME PERIOD MM:SS* MM:SS = current setting	Enter the correct amount of time per period in minutes and seconds on the number pad and press **<ENTER>**. For example, 3:00 per period. **Note:** Pressing **<ENTER>** to select the period time as the main clock setting will increment the current period number if the clock value was previously zero.

Blood/Injury Time

The maximum allowed blood and injury times are set for each competitor at the beginning of a match and reset to these times when the Reset Match function is performed.

When enabled, the blood and injury times are displayed in the main clock digits and the corresponding (home or guest) match score digits flash.

LCD Display	Action
BLOOD TIME RESET MM:SS MM:SS = current setting	Enter the cumulative time for blood time outs in minutes and seconds on the number pad and press <**ENTER**>. For example, 5:00.
INJURY TIME RESET MM:SS MM:SS = current setting	Enter the cumulative time for injury time outs in minutes and seconds on the number pad and press <**ENTER**>. For example, 2:00.
BLOOD/INJURY SHOW ON MAIN? N N = current setting	Press **<YES>** to display the blood/injury times on the LCD and the main clock digits of the scoreboard while the blood/injury clock is active. Press **<NO>** to display the time out time on the LCD only.

Weight Class

LCD Display	Action
WEIGHT CLASS ON Y/N? - ON	This setting allows you to use weight classes. Press <**YES**> to use weight classes, or press <**NO**> to select not to use weight classes.

Select Captions

LCD Display	Action
SELECT CAPTIONS ON 1 ← → 2 OFF	This menu option allows for the controlled backlit captions to be turned ON/OFF. Press the <**1**> key to select ON and OFF for captions controlled by control #1. Press the <**2**> key to select ON and OFF for captions controlled by control #2.

Display Lines for Weight Class

LCD Display	Action
# OF DISP LINES N *N* = number of lines	This setting represents the number of lines used on the stat panel displays. It can only be set to 5 or 6. Press the <**5**> or <**6**> key and then <**ENTER**>.

Display Team Score

LCD Display	Action
DISPLAY NO TEAM SCORE Y/N? *N* = number of lines	This menu option allows for selection of having the Team Score display on the Matside advantage/team score module. If set to display it will show team score after the match is reset until an advantage time is started. Press <**YES**> to select display ON. Press <**NO**> to select display OFF.

Switch Output

The All Sport 5000 series console has a switch that can be used to drive a number of different devices. The switch can be configured to operate under different settings. The default setting is 1-CLOCK= 0.

To display the switch setting that you want to select:

Press the number (0,1,2,3) key as a shortcut or use the left and right arrow keys to scroll to the desired setting.

Press **<YES>** to select the new setting.

Press **<NO>** or the down arrow key to leave the switch setting and display the next prompt (please refer to the table on the following page).

The possible settings for the switch output are as follows:

Setting	Result
0 - DISABLED SWITCH OUTPUT=N 0-DISABLED? N = current setting	The switch remains open at all times and any external devices are disabled.
1-CLOCK = 0 SWITCH OUTPUT=N 1-CLOCK =0? N = current setting	In count down mode, the switch closes when the main clock reaches zero and remains closed until a nonzero value is entered. In count up mode, the switch closes when the main clock reaches the proper period, break, or overtime length and opens when any other value is entered.
2-CLOCK STOP SWITCH OUTPUT=N 2-CLOCK STOP? N = current setting	The switch closes when the main clock is stopped and opens when the main clock is running. External devices are disabled when the main clock is running.
3-MAIN HORN SWITCH OUTPUT=N 3-MAIN HORN? N = current setting	The switch closes when the main horn sounds. This could be when Auto Horn is enabled and the main clock reaches zero or when **<HORN>** is pressed.

Section 15: Event Counter

Sport Insert: 06-58047

The Sport Insert drawing is located at the end of this section. The **Quick Reference** is located in **Appendix D**.

Reference Drawings:
Insert, Event Counter Codes.....**Drawing A-58047**

Refer to the information in **Section 2** to start up the console and use the sport insert. Read **Section 2** carefully to fully understand the following operation instructions. If an insert is lost or damaged, a copy of the insert drawing located at the end of this section can be used until a replacement can be ordered.

15.1 General Event Counter Information

Note: The All Sport 5000 uses Enhanced RTD with Venus 4600 / 7000 codes

The Event Counter program is made up of six codes used to display information about external events. The codes used for event counter are shown below.

Day and Time Event Countdown Code
- **Venus 1500 RTD 371**
- **Venus 4600/7000 Enhanced RTD 372**

Time Base Counter Code
- **Venus 1500 RTD 373**
- **Venus 4600/7000 Enhanced RTD 374**

External Input Counter Code
- **Venus 1500 RTD 375**
- **Venus 4600/7000 Enhanced RTD 376**

RTD port settings are 19,200 Baud, 8 Data, and no parity for both Venus 1500 and Enhanced RTD types.

15.2 Day and Time Event Countdown

LCD Display	Action
DAYS NNN HH:MM:SS ↓ HH:MM.SS = current value	If set to count down, the number of days, hours, minutes, and seconds remaining until the event occurs are shown on the main LCD screen.
DAYS NNN HH:MM:SS ↑	If set to count up, the number of days, hours, minutes, and seconds elapsed since the event occurred are shown on the main LCD screen.

Value/Days
Use the **<SET MAIN CLOCK>** key to set the Time in addition to the number of days to be counted.

Press **<START>** to start the main clock. If the console is set to count down, the time value decrements to 00:00.00 and the day value decrements by one. This continues until 0 days and 00:00.00 time occurs. The console then begins counting up and counts the days and time that have elapsed since the event occurred.

Note: If the console is set to stop at zero, the clock will not begin counting up until the **<START>** key is pressed.

LCD Display	Action
DAYS NNN NNN = current value	Enter the number of days for countdown (0 – 999).

15.3 Time Base Counter

LCD Display	Action
VALUE = NNNNNNN NXT INC HH:MM:SS nnnnnnn = current value	The current value is shown on the top line of the LCD. The time remaining until the next increment (or decrement.) is shown on the bottom line.

Value/Days

LCD Display	Action
VALUE NNNNNNNN nnnnnnn = current value	Press **<VALUE/DAYS>** to begin counting from the entered initial value. The value can be up to eight digits.

Increment Value

LCD Display	Action
INCREMENT VALUE NNNN nnnn = current value	This key is used to set the increment value. The increment value will be added to the total value each time interval.

Decrement Value

LCD Display	Action
DECREMENT VALUE NNNN nnn = current value	This key is used to set the decrement value. The decrement value will be subtracted from the total value each time interval **if the increment value is 0**.

Time Interval

When **<START>** is pressed to start the main clock, the controller counts down the time interval to 00:00.00 and adjust the initial value by the increment or decrement value. The interval time is reset and the cycle will repeat.

LCD Display	Action
TIME INTERVAL HH:MM:SS HH:MM.SS = current value	The time interval is the interval time between each increment or decrement. **Note:** The clock must be stopped to set the time interval.

15.4 External Input Counter

The External Input Counter counts the occurrences of switch inputs starting at the initial value.

Value/Days

LCD Display	Action
VALUE NNNNNNNNN NNNNNNNN = current value	Press **<VALUE/DAYS>** to begin counting from the entered initial value. The value can be up to eight significant digits.

Increment Value

LCD Display	Action
INCREMENT VALUE NNNN NNNN = current value	This key is used to set the increment value. The increment value is added to the total value each time an external switch input 1 is detected (J4).

Decrement Value

LCD Display	Action
DECREMENT VALUE NNNN NNNN = current value	This key is used to set the decrement value. The decrement value is subtracted from the total value each time an external switch input 2 is detected (J4).

15.5 Menu

The **<MENU>** key allows the user to select from a list of options specific for each sport. The up and down arrow keys allow the user to scroll through the menu list. Pressing a key other than **<YES>**, **<NO>**, the arrow keys, and other allowed keys exit the Menu function.

New Game

LCD Display	Action
MENU-MAIN NEW GAME?	Press **<YES>** to begin a new game with the default code settings. Press **<NO>** to resume the game in progress using the current data and exit the Menu. Press the down arrow key to scroll to the next selection.

New Code

LCD Display	Action
MENU-MAIN NEW CODE?	Press **<YES>** to begin selection of a new code from the **ENTER CODE** prompt. Press **<NO>** to resume the game in progress using the current data and exit the Menu. Press the down arrow key to scroll to the next selection.

Dim/ Bright

LCD Display	Action
MENU- DIMMING LEVEL (0-9): NN% NN = current level NONE = bright <0> 90% = <1> 80% = <2> 70% = <3> 60% = <4> 50% = <5> 40% = <6> 30% = <7> 20% = <8> 10% = <9>	Press **<0>** through **<9>** or use the arrow keys <🡐> <🡒>, to select the intensity for the digits on the scoreboard. Press <**NO**> to resume the game in progress using the current data, and exit the Menu. Press the down arrow key <🡓> to scroll to the next selection. **Note:** Dim levels pertain to outdoor LED products. Indoor LED and incandescent products only support one level of dimming at 50%.

Stop at Zero

The following setting is only displayed when using Day and Time codes 371 **and** 372**.**

LCD Display	Action
STOP AT ZERO *YES OR NO? Default = NO	Press **<YES>** to stop the console when zero days and zero time occurs. Press **<NO>** to set the console to start counting time elapsed since the event occurs.

Section 16: Karate Operations

Sport Insert: 0G-96890 Red/White Code 282
0G-98374 White/Red Code 285

The Sport Insert drawing is located at the end of this section. The Team Name insert and Block Diagram drawings are located in **Appendix A**.

Reference Drawings:

Insert, Karate Code 282 ..... **Drawing A-96890**
Insert, Karate Code 285 ..... **Drawing A-98374**

Refer to the information in **Section 2** to start up the console and use the sport insert. Read **Section 2** carefully to fully understand the following operation instructions.

If an insert is lost or damaged, a copy of the insert drawing located at the end of this section can be used until a replacement can be ordered.

16.1 Karate Keys

W (Wazaari)

LCD Display	Action
WHITE W +1 N N = new value	**<W+1>** and **<W-1>** increment and decrement the Wazaari value for the selected competitor.

H (Hansoku)

LCD Display	Action
WHITE H +1 N N = new value	**<H+1>** and **<H-1>** increment and decrement the Hansoku for the selected opponent.

M (Mubobi)

LCD Display	Action
WHITE M +1 N N = new value	**<M+1>** and **<M-1>** increment or decrement the Mubobi value for the selected competitor

J (Jogai)

LCD Display	Action
WHITE J +1 N N = new value	**<J+1>** and **<J-1>** increment or decrement the Jogai value for the selected competitor

Win

LCD Display	Action
WHITE WIN ON	**<WIN>** turns on the Win indicator for the selected opponent.

16.2 Edit

W,H,M,J

The W,H,M and J values are edited in the same way. D is shown as an example.

LCD Display	Action
WHITE D EDIT N N = current setting	When **<EDIT><D + 1>** is pressed, the current D value is displayed for editing. The current value is shown in the N position on the LCD.

16.3 Menu

The **<MENU>** key allows the user to select from a list of options specific for each sport. The up and down arrow keys allow the user to scroll through the menu list. Pressing a key other than **<YES>**, **<NO>**, the arrow keys, and other allowed keys exit the Menu function.

New Game
When the LCD Display is as shown, the following actions may be selected.

LCD Display	Action
MENU-MAIN NEW GAME?	Press **<YES>** to clear all of the program data for the last game played or the game in progress and begin running the selected sport. Press **<NO>** to resume the game in progress using the current data and exit the Menu. Press the down arrow key to scroll to the next selection.

New Code
When the LCD Display is as shown, the following actions may be selected.

LCD Display	Action
MENU-MAIN NEW CODE?	Press **<YES>** to begin selection of a new code from the ENTER CODE prompt. Press **<NO>** to resume the game in progress using the current data and exit the Menu. Press the down arrow key to scroll to the next selection.

Display Menu

The **DISPLAY MENU** allows the user to start and edit the segment timer or to change the brightness of the scoreboard.

LCD Display	Action
MENU-MAIN ENTER DISPLAY MENU?	Press **<YES>** to select the Display submenu and show the first prompt on the LCD. Press the down arrow key to scroll to the next selection.
MENU-DISPLAY RUN SEG TIMER Y/N	**Note:** The segment timer function is disabled while the clock is running. Press **<YES>** to exit the sport code and run the segment timer program. Press **<NO>** or the down arrow key to scroll to the next selection.
EXIT GAME ARE YOU SURE Y/N	This prompt confirms that the user wants to exit the sport code and enter the segment timer **The SEGMENT TIMER (LL-2475) insert must be inserted to enter the Segment Timer settings.** Refer to **Section 3** for more information on the segment timer. Press **<YES>** to exit the sport code and run the segment timer program. Press **<NO>** or the down arrow key to scroll to the next selection.

(Continued on next page)

(Continued from previous page)

LCD Display	Action
MENU- DIMMING LEVEL (0-9): NN% NN = current level NONE = bright <0> 90% = <1> 80% = <2> 70% = <3> 60% = <4> 50% = <5> 40% = <6> 30% = <7> 20% = <8> 10% = <9>	Press **<0>** through **<9>** or use the arrow keys <🡐> <🡒>, to select the intensity for the digits on the scoreboard. Press <**NO**> to resume the game in progress using the current data, and exit the Menu. Press the down arrow key <🡓> to scroll to the next selection. **Note:** Dim levels pertain to outdoor incandescent products. Indoor LED products only support one level of dimming at 50%.

Edit Settings

When the LCD Display is as shown, the following actions may be selected.

LCD Display	Action
MENU-MAIN EDIT SETTINGS?	Press **<YES>** or the right or left arrow key to select the Settings submenu and show the first prompt on the LCD. Refer to **Section 16.4**. Press **<NO>** to resume the game in progress using the current data and exit the Menu. Press the down arrow key to scroll to the next selection.

Time of Day

LCD Display	Action
MENU-MAIN SELECT TOD?	Press **<YES>** or the right arrow key to select the Time of Day submenu and show the first prompt on the LCD. Press **<NO>** to resume the game in progress using the current data and exit the Menu.
MENU-TIME OF DAY 1*12, 2-24 HOUR	Press **<1>** or **<2>** to display the time of day in 12 hour (default) or 24 hour format. Press **<ENTER>** or the down arrow key to scroll to the next selection.
MENU-TIME OF DAY TOD HH:MM:SS* HH:MM:SS = current setting	Enter the time of day in hours, minutes, and seconds using the selected format on the number pad and press **<ENTER>**. Press **<ENTER>** or the down arrow key to scroll to the next selection.
MENU-TIME OF DAY 1*GAME 2-TOD * = current setting	Press **<1>** or **<2>** to display the game clock (default) or the time of day clock on the scoreboard. Press the down arrow key to exit the Menu and return to the game.

16.4 Settings

The following settings can be edited by the user when **EDIT SETTINGS** has been selected from the Main Menu.

Main Clock

LCD Display	Action
MAIN CLOCK-TIME PERIOD MM:SS MM:SS = current setting	Enter the correct amount of time per period in minutes and seconds on the number pad and press **<ENTER>**. For example, 5:00. **Note:** Pressing **<ENTER>** to select the period time as the main clock setting will increment the current period number if the clock value was previously zero.

Switch Output

The All Sport 5000 series console has a relay that can be used to drive a number of different devices. The relay can be configured to operate under different settings. The default setting is 1-CLOCK= 0.

To display the relay settings that you want to select:

Press the number (0,1,2,3) key as a shortcut or use the left and right arrow keys to scroll to the desired setting.

Press **<YES>** to select the new setting.

Press **<NO>** or the down arrow key to leave the relay setting and display the next prompt.

The possible settings for relay output are as follows:

Setting	Result
0 - DISABLED SWITCH OUTPUT=N 0-DISABLED? N = current setting	The relay remains open at all times and any external devices are disabled.
1-CLOCK = 0 SWITCH OUTPUT=N 1-CLOCK =0? N = current setting	In count down mode, the relay closes when the main clock reaches zero and remains closed until a nonzero value is entered. In count up mode, the relay closes when the main clock reaches the proper period, break, or overtime length and opens when any other value is entered.

Setting	Result
2-CLOCK STOP SWITCH OUTPUT=N 2-CLOCK STOP? N = current setting	The relay closes when the main clock is stopped and opens when the main clock is running. External devices are disabled when the main clock is running.
3-MAIN HORN SWITCH OUTPUT=N 3-MAIN HORN? N = current setting	The relay closes when the main horn sounds. This could be when Auto Horn is enabled and the main clock reaches zero or when **<HORN>** is pressed.

Default Settings

Write the settings for this installation in the space (Custom) provided.

Setting	Default	Custom 1	Custom 2	Custom 3
Switch Output	1-Clock =0			
Main Clock Period Length	5:00			

Section 17: Tae Kwon Do Operations

Sport Insert: 0G-96889 Red/White Code 283
0G-98375 White/Red Code 286

The Sport Insert drawing is located at the end of this section. The Team Name insert and Block Diagram drawings are located in **Appendix A**

Reference Drawings:

Insert, Tae Kwon Do, Code 283.....**Drawing A-96889**
Insert, Tae Kwon Do, Code 286.....**Drawing A-98375**

Refer to the information in **Section 2** to start up the console and use the sport insert. Read **Section 2** carefully to fully understand the following operation instructions.

If an insert is lost or damaged, a copy of the insert drawing located at the end of this section can be used until a replacement can be ordered.

17.1 Tae kwon do Keys

D

LCD Display	Action
WHITE D +1 N N = new value	<**WHITE D+1**> and <**WHITE D-1**> increment and decrement the points value for the selected competitor.

Gamjeom (G)

LCD Display	Action
WHITE G +1 N N = new value	<**WHITE G+1**> and <**WHITE G-1**> increment and decrement the penalty count for the selected opponent.

Kyong-go (K)

LCD Display	Action
WHITE K +1 N N = new value	<**WHITE K+1**> and <**WHITE K-1**> increment or decrement the ½ point deduction warnings for the selected opponent.

Win

LCD Display	Action
WHITE WIN ON	<**WIN**> turns on the Win indicator for the selected opponent.

√

LCD Display	Action
WHITE CHECK ON	<√> turns on the check indicator for the selected opponent.

Total On/Off

<TOTAL ON/OFF> sets the total point scoring on or off. The total points for each competitor are calculated from scoring for all rounds.

The score is calculated as follows:

D(points) – G(penalties) – ½K(warnings) = Total Score

Weight Class

LCD Display	Action
WEIGHT CLASS NN NN = current setting	<**WEIGHT CLASS** > sets weight class shown on the display.

Round Length

LCD Display	Action
ROUND LENGTH NN:NN NN = current setting	<**ROUND LENGTH** > sets the length of the round.

Rest Length

LCD Display	Action
REST LENGTH NN:NN NN = current setting	<**REST LENGTH** > sets the length of the rest period. The rest length is automatically counted down after the round time expires.

Round Number

LCD Display	Action
ROUND NUMBER NN NN = current setting	<**ROUND NO.**> sets the current round number. The round number will be automatically incremented at the end of each rest period.

17.2 Menu

The **<MENU>** key allows the user to select from a list of options specific for each sport. The up and down arrow keys allow the user to scroll through the menu list. Pressing a key other than **<YES>**, **<NO>**, the arrow keys, and other allowed keys exits the Menu function.

New Game

LCD Display	Action
MENU-MAIN NEW GAME?	Press <**YES**> to clear all of the program data for the last game played or the game in progress and begin running the selected sport. Press <**NO**> to resume the game in progress using the current data and exit the Menu. Press the down arrow key to scroll to the next selection.

New Code

LCD Display	Action
MENU-MAIN NEW CODE?	Press <**YES**> to begin selection of a new code from the **ENTER CODE** prompt. Press <**NO**> to resume the game in progress using the current data and exit the Menu. Press the down arrow key to scroll to the next selection.

Reset Round

LCD Display	Action
MENU-MAIN RESET ROUND?	Press <**YES**> reset the main clock to the configured round length value. **Note:** This function is disabled when the clock is running. Press the down arrow key to scroll to the next selection.

Reset Rest

LCD Display	Action
MENU-MAIN RESET REST?	Press <**YES**> reset the main clock to the configured rest length value. **Note:** This function is disabled when the clock is running. Press the down arrow key to scroll to the next selection.

Display Menu

The **DISPLAY MENU** allows the user to start and edit the segment timer or to change the brightness of the scoreboard.

LCD Display	Action
MENU-MAIN ENTER DISPLAY MENU?	Press <**YES**> to select the Display submenu and show the first prompt on the LCD. Press the down arrow key to scroll to the next selection.

(Continued on next page)

(Continued from previous page)

LCD Display	Action
MENU-DISPLAY RUN SEG TIMER Y/N	**Note:** The segment timer function is disabled while the clock is running. Press <**YES**> to exit the sport code and run the segment timer program. Press <**NO**> or the down arrow key to scroll to the next selection.
EXIT GAME ARE YOU SURE Y/N	This prompt confirms that the user wants to exit the sport code and enter the segment timer **The SEGMENT TIMER (LL-2475) insert must be inserted to enter the Segment Timer settings.** Refer to **Section 2** for more information on the Segment Timer. Press <**YES**> to exit the sport code and run the segment timer program. Press <**NO**> or the down arrow key to scroll to the next selection.
MENU- DIMMING LEVEL (0-9): NN% NN = current level NONE = bright <**0**> 90% = <**1**> 80% = <**2**> 70% = <**3**> 60% = <**4**> 50% = <**5**> 40% = <**6**> 30% = <**7**> 20% = <**8**> 10% = <**9**>	Press **<0>** through **<9>** or use the arrow keys <←> <→>, to select the intensity for the digits on the scoreboard. Press <**NO**> to resume the game in progress using the current data, and exit the Menu. Press the down arrow key <↓> to scroll to the next selection. **Note:** Dim levels pertain to outdoor LED products. Indoor LED and incandescent products only support one level of dimming at 50%.

Edit Settings

LCD Display	Action
MENU-MAIN EDIT SETTINGS?	Press <**YES**> or the right or left arrow key to select the Settings submenu and show the first prompt on the LCD. Press <**NO**> to resume the game in progress using the current data and exit the Menu. Press the down arrow key to scroll to the next selection.

Time of Day

LCD Display	Action
MENU-MAIN SELECT TOD?	Press <**YES**> or the right arrow key to select the Time of Day submenu and show the first prompt on the LCD. Press <**NO**> to resume the game in progress using the current data and exit the Menu.
MENU-TIME OF DAY 1*12, 2-24 HOUR	Press <**1**> or <**2**> to display the time of day in 12 hour (default) or 24 hour format. Press <**ENTER**> or the down arrow key to scroll to the next selection.
MENU-TIME OF DAY TOD HH:MM:SS* HH:MM:SS = current setting	Enter the time of day in hours, minutes, and seconds using the selected format on the number pad and press <**ENTER**>. Press <**ENTER**> or the down arrow key to scroll to the next selection.
MENU-TIME OF DAY 1*GAME 2-TOD * = current setting	Press <**1**> or <**2**> to display the game clock (default) or the time of day clock on the scoreboard. Press the down arrow key to exit the Menu and return to the game.

17.3 Edit

D,G,K

The D, G, and K values are edited in the same way. D is shown as an example.

LCD Display	Action
WHITE D EDIT NN NN = current setting	When <**EDIT**><**D + 1**> is pressed, the current D value is displayed for editing. The current value is shown in the n position on the LCD.

17.4 Settings

The user can edit the following settings when **EDIT SETTINGS** has been selected from the Main Menu.

Auto/Manual Timing

LCD Display	Action
TIMING MODE *AUTO←→MANUAL * = current setting	Press the left or right arrow keys to select automatic or manual timing respectively. In automatic timing mode, the round length value will be loaded into the main clock and automatically started when the rest length expires. In manual mode, the console will wait for a <**START**> key press to start the round time.

Switch Output

The All Sport 5000 series console has a relay that can be used to drive a number of different devices. The relay can be configured to operate under different settings. The default setting is 1-CLOCK= 0.

To display the relay settings that you want to select:

Press the number (0,1,2,3) key as a shortcut or use the left and right arrow keys to scroll to the desired setting.

Press **<YES>** to select the new setting.

Press **<NO>** or the down arrow key to leave the relay setting and display the next prompt.

The possible settings for relay output are as follows:

Setting	Result
0 - DISABLED SWITCH OUTPUT=N 0-DISABLED? N = current setting	The relay remains open at all times and any external devices are disabled.
1-CLOCK = 0 SWITCH OUTPUT=N 1-CLOCK =0? N = current setting	In count down mode, the relay closes when the main clock reaches zero and remains closed until a nonzero value is entered. In count up mode, the relay closes when the main clock reaches the proper period, break, or overtime length and opens when any other value is entered.
2-CLOCK STOP SWITCH OUTPUT=N 2-CLOCK STOP? N = current setting	The relay closes when the main clock is stopped and opens when the main clock is running. External devices are disabled when the main clock is running.
3-MAIN HORN SWITCH OUTPUT=N 3-MAIN HORN? N = current setting	The relay closes when the main horn sounds. This could be when Auto Horn is enabled and the main clock reaches zero or when <**HORN**> is pressed.

Default Settings

Write the settings for this installation in the space (Custom) provided.

Setting	Default	Custom 1	Custom 2	Custom 3
Switch Output	1-Clock =0			
Auto/Manual Timing	Auto			
Round Length (accessed by key)	3:00			
Rest Length (accessed by key)	1:00			

Section 18: Judo Operations

Sport Insert: 0G-96891 Blue/White Code 281
0G-98376 White/Blue Code 284

The Sport Insert drawing is located at the end of this section. The Team Name insert and Block Diagram drawings are located in **Appendix A**.

Reference Drawings:

Insert, Judo code 281 .....**Drawing A-96891**
Insert, Judo code 284 .....**Drawing A-98376**

Refer to the information in **Section 2** to start up the console and use the sport insert. Read **Section 2** carefully to fully understand the following operation instructions.

If an insert is lost or damaged, a copy of the insert drawing located at the end of this section can be used until a replacement can be ordered.

18.1 Judo Competitor Status

LCD Display	Action
TIME 4:00 ↓ WYKP++WYKP++ W = waza ari score position Y = yuko score position K = koka score position P = penalty character position + + = medical exam positions	The bottom line of the LCD will either display the Osaekomi time, the medical time or the competitor status during the operation of the All Sport 5000 console in this mode. When competitor status is displayed, it will show from left to right the one digit score (waza ari, yuko, koka), one character for penalties (K, C, S) and two possible medical exam indicators (+, +). This information is repeated for the other competitor. The data will be display on the LCD according to the code entered into the All Sport 5000 console: Blue-White (Code 281) or White-Blue (Code 284).

18.2 Judo Keys

White and Blue Osaekomi

LCD Display	Action
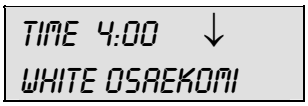	<**WHITE OSAEKOMI**> and <**BLUE OSAEKOMI**> start the Osaekomi timer. The timer displays on the corresponding opponents side of the scoreboard. The Osaekomi timer counts up to the time configured as Ippon time and sounds the horn unless the selected opponent's Wazaari is non-zero. If the latter condition is true, the Osaekomi Timer stops at the configured Wazaari time and sounds the horn.

Set Osaekomi

LCD Display	Action
 NN:NN = current setting	<**SET WHITE OSAEKOMI**> and <**SET BLUE OSAEKOMI**> sets the Osaekomi time for either competitor (in seconds.) **Notes:** This key is disabled while the Osaekomi Timer is running. The Osaekomi time displays on the bottom line of the LCD.

Sono-Mama

LCD Display	Action
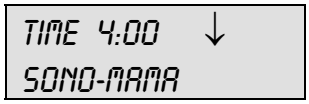	<**SONO-MAMA**> stops the Osaekomi and main clock and disables the <**START**> key. The values of Osaekomi and main clock are held until the <**YOSHI**> key is pressed to resume. **Note:** An "S" appears next to the Osaekomi time on the bottom line of the LCD to show the current Sono-Mama state.

Yoshi

LCD Display	Action
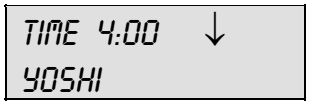	<**YOSHI**> restarts the Osaekomi and main clock if they were previously running and stopped by the <**SONO-MAMA**> key. The clocks continue counting from the values on the scoreboard when the timers were stopped. **Note:** This key is disabled when a Sono-Mama is not currently selected.

Toketa

LCD Display	Action
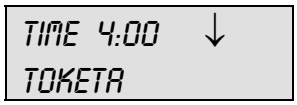	<**TOKETA**> stops the Osaekomi timer. Osaekomi time starts from zero the next time the <**WHITE OSAEKOMI**> or <**BLUE OSAEKOMI**> keys are pressed.

Clear

LCD Display	Action
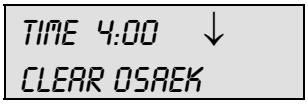	<**CLEAR**> clears the Osaekomi time from both opponents' sides of the scoreboard. **Note:** This key is disabled if the Osaekomi timer is running or if the Osaekomi timer is currently on.

Win

LCD Display	Action
	<**WIN**> flashes the Winner indicator for the selected opponent.

Ippon

LCD Display	Action
	<**IPPON**> lights the Ippon indicator and flashes the Winner indicator for the selected opponent. The opponents Winner and Ippon indicators are cleared.

Medical Exam

LCD Display	Action
BLUE MEDICAL 1 ON MAX MEDICAL	There are two <**MEDICAL EXAM**> keys on the All Sport 5000. The first press of <**MEDICAL EXAM**> turns on the indicator for the selected opponent and starts the medical timer. The timer will display in the Osaekomi digits and the medical indicator will flash while the timer is running to indicate it is a medical time. Pressing <**MEDICAL EXAM**> a second time will stop the timer if it is running. If the timer is not running, it will turn on the second indicator and start the timer. Once both medical indicators are turned on, pressing <**MEDICAL EXAM**> will not allow the medical timer to start. The LCD screen will show “Max Medical” when the key is pressed. Pressing the other <**MEDICAL EXAM**> key while the timer is running will switch the indicator and the timer to the corresponding side of the display and the timer will continue to run.

Keikoku

LCD Display	Action
WHITE KEIK ON BLUE WAZAARI N *N* = new value	<**KEIKOKU**> lights the corresponding penalty indicator and increments the opposing players Wazaari by one. Pressing <**KEIKOKU**> a second time clears the penalty indicator and decrements the opposing players Wazaari by one. The LCD shows the current indicator status and the new Wazaari value for the opposing player. **Note:** Any other penalties (Chui or Shido) for the selected player are cleared when a Keikoku penalty is assessed. Corresponding Yuko and Koka opponent values are decremented.

Wazaari

LCD Display	Action
WAZAARI +1 N N = current value	<**WAZAARI+1**> and <**WAZAARI-1**> keys increment or decrement the selected opponent's Wazaari value. Wazaari values can be 1,2, or zero.

Chui

LCD Display	Action
WHITE CHUI ON BLUE YUKO N N = new value	<**CHUI**> lights the corresponding penalty indicator and increments the opposing players Yuko by one. Pressing <**CHUI**> a second time clears the penalty indicator and decrements the opposing players Yuko by one. The LCD shows the current indicator status and the new Yuko value for the opposing player. **Note:** Any other penalties (Keikoku or Shido) for the selected player are cleared when a Chui penalty is assessed. Corresponding Wazaari and Koka opponent values are decremented.

Yuko

LCD Display	Action
YUKO +1 N N = current value	<**YUKO+1**> and <**YUKO-1**> keys increment or decrement the selected opponent's Yuko value. Yuko values can be 1-9 or zero.

Shido

LCD Display	Action
WHITE SHIDO ON BLUE KOKA N *N* = new value	<**SHIDO**> lights the corresponding penalty indicator and increments the opposing players Koka by one. Pressing <**SHIDO**> a second time clears the penalty indicator and decrements the opposing players Koka by one. The LCD shows the current indicator status and the new Koka value for the opposing player. **Note:** Any other penalties (Keikoku or Chui) for the selected player are cleared when a Shido penalty is assessed. Corresponding Wazaari and Yuko opponent values are decremented.

Koka

LCD Display	Action
KOKA +1 N *N* = current value	<**KOKA+1**> and <**KOKA-1**> keys increment or decrement the selected opponent's Koka value. Koka values can be 1-9 or zero.

18.3 Edit

Yuko/Koka
The **Yuko** and **Koka** values are edited in the same way. **Yuko** is shown as an example.

LCD Display	Action
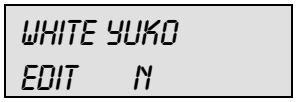 N = current setting	When <**EDIT**><**YUKO + 1**> is pressed, the current yuko value is displayed for editing. The current value is shown in the n position on the LCD.
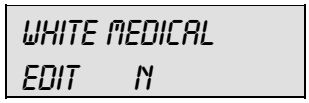 N = current setting	When <**EDIT**><**MEDICAL**> is pressed, the current medical value is displayed for editing. Enter the desired value and press <**ENTER**>. The current value is shown in the n position on the LCD.

18.4 Menu

The **<MENU>** key allows the user to select from a list of options specific for each sport. The up and down arrow keys allow the user to scroll through the menu list. Pressing a key other than **<YES>**, **<NO>**, the arrow keys, and other allowed keys exit the Menu function.

New Game

LCD Display	Action
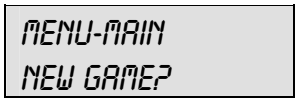	Press <**YES**> to clear all of the program data for the last game played or the game in progress and begin running the selected sport. Press <**NO**> to resume the game in progress using the current data and exit the Menu. Press the down arrow key to scroll to the next selection.

New Code

LCD Display	Action
MENU-MAIN NEW CODE?	Press <**YES**> to begin selection of a new code from the **ENTER CODE** prompt. Press <**NO**> to resume the game in progress using the current data and exit the Menu. Press the down arrow key to scroll to the next selection.

Display Menu

The **DISPLAY MENU** allows the user to start and edit the segment timer or to change the brightness of the scoreboard.

LCD Display	Action
MENU-MAIN ENTER DISPLAY MENU?	Press <**YES**> to select the Display submenu and show the first prompt on the LCD. Press the down arrow key to scroll to the next selection.

(Continued on next page)

(Continued from previous page)

LCD Display	Action
MENU-DISPLAY RUN SEG TIMER Y/N	**Note:** The segment timer function is disabled while the clock is running. Press <**YES**> to exit the sport code and run the segment timer program. Press <**NO**> or the down arrow key to scroll to the next selection.
EXIT GAME ARE YOU SURE Y/N	This prompt confirms that the user wants to exit the sport code and enter the segment timer. **The SEGMENT TIMER (LL-2475) insert must be inserted to enter the Segment Timer settings.** Refer to **Section 3** for more information on the segment timer. Press <**YES**> to exit the sport code and run the segment timer program. Press <**NO**> or the down arrow key to scroll to the next selection.
MENU- DIMMING LEVEL (0-9): NN% NN = current level NONE = bright <**0**> 90% = <**1**> 80% = <**2**> 70% = <**3**> 60% = <**4**> 50% = <**5**> 40% = <**6**> 30% = <**7**> 20% = <**8**> 10% = <**9**>	Press <**0**> through <**9**> or use the arrow keys <🡐> <🡒>, to select the intensity for the digits on the scoreboard. Press <**NO**> to resume the game in progress using the current data, and exit the Menu. Press the down arrow key <🡓> to scroll to the next selection. **Note:** Dim levels pertain to outdoor LED products. Indoor LED and incandescent products only support one level of dimming at 50%.

Edit Settings

LCD Display	Action
MENU-MAIN EDIT SETTINGS?	Press <**YES**> or the right or left arrow key to select the Settings submenu and show the first prompt on the LCD. Press <**NO**> to resume the game in progress using the current data and exit the Menu. Press the down arrow key to scroll to the next selection.

Time of Day

LCD Display	Action
MENU-MAIN SELECT TOD?	Press <**YES**> or the right arrow key to select the Time of Day submenu and show the first prompt on the LCD. Press <**NO**> to resume the game in progress using the current data and exit the Menu.
MENU-TIME OF DAY 1*12, 2-24 HOUR	Press <**1**> or <**2**> to display the time of day in 12 hour (default) or 24 hour format. Press <**ENTER**> or the down arrow key to scroll to the next selection.
MENU-TIME OF DAY TOD HH:MM:SS* HH:MM:SS = current setting	Enter the time of day in hours, minutes, and seconds using the selected format on the number pad and press <**ENTER**>. Press <**ENTER**> or the down arrow key to scroll to the next selection.
MENU-TIME OF DAY 1*GAME 2-TOD * = current setting	Press <**1**> or <**2**> to display the game clock (default) or the time of day clock on the scoreboard. Press the down arrow key to exit the Menu and return to the game.

18.5 Settings

The user can edit the following settings when **EDIT SETTINGS** has been selected from the Main Menu.

Main Clock

LCD Display	Action
MAIN CLOCK-TIME PERIOD MM:SS MM:SS = current setting	Enter the correct amount of time per period in minutes and seconds on the number pad and press <**ENTER**>. For example, 4:00. **Note:** Pressing <**ENTER**> to select the period time as the main clock setting will increment the current period number if the clock value was previously zero.

Wazaari Time

LCD Display	Action
OSAEKOMI LIMIT WAZAARI TIME:NN* NN = current value	This function sets the configured Wazaari limit for the Osaekomi Timer. This is the value at which the Osaekomi Timer will stop if the selected opponents Wazaari is 1 or greater. .

Ippon Time

LCD Display	Action
OSAEKOMI LIMIT IPPON TIME:NN* nn = current value	This function sets the configured Ippon time for the Osaekomi Timer. The Osaekomi Timer stops at this value by default.

Medical Time

LCD Display	Action
MEDICAL TIME 0:60	This function sets the configured time for a medical exam time. The time can be set up to 99 seconds. Setting the time to 0:00 will disable the timing function of the medical exam key.

Switch Output

The All Sport 5000 series console has a switch that can be used to drive a number of different devices. The switch can be configured to operate under different settings. The default setting is 1-CLOCK= 0.

To display the switch setting that you want to select:

Press the number (0,1,2,3) key as a shortcut or use the left and right arrow keys to scroll to the desired setting.

Press **<YES>** to select the new setting.

Press **<NO>** or the down arrow key to leave the switch setting and display the next prompt (please refer to the table on the following page).

The possible settings for the switch output are as follows:

Setting	Result
0 - DISABLED SWITCH OUTPUT=N 0-DISABLED? N = current setting	The switch remains open at all times and any external devices are disabled.
1-CLOCK = 0 SWITCH OUTPUT=N 1-CLOCK =0? N = current setting	In count down mode, the switch closes when the main clock reaches zero and remains closed until a nonzero value is entered. In count up mode, the switch closes when the main clock reaches the proper period, break, or overtime length and opens when any other value is entered.
2-CLOCK STOP SWITCH OUTPUT=N 2-CLOCK STOP? N = current setting	The switch closes when the main clock is stopped and opens when the main clock is running. External devices are disabled when the main clock is running.
3-MAIN HORN SWITCH OUTPUT=N 3-MAIN HORN? N = ***CURRENT SETTING***	The switch closes when the main horn sounds. This could be when Auto Horn is enabled and the main clock reaches zero or when <**HORN**> is pressed.

Default Settings

Write the settings for this installation in the space (Custom) provided.

Custom	Custom	Custom 1	Custom 2	Custom 3
Main Clock Period Length	4:00			
Switch Output	1-Clock = 0			
Wazaari Time	20			
Ippon Time	25			
Medical Time	0:60			

Section 19: Boxing Operations

Sport Insert: 0G-96892 Boxing Code 0291

The Sport Insert drawing is located at the end of this section. The Team Name insert and Block Diagram drawings are located in **Appendix A**.

Reference Drawings:

Insert, Boxing, Code 291 .....**Drawing A-096892**

Refer to the information in **Section 2** to start up the console and use the sport insert. Read **Section 2** carefully to fully understand the following operation instructions.

If an insert is lost or damaged, a copy of the insert drawing located at the end of this section can be used until a replacement can be ordered.

19.1 Boxing Keys

Set Round Time/Set Rest Time

<SET ROUND TIME> and **<SET REST TIME>** have similar functions and are described by the table below. In the LCD Display window, **<SET ROUND TIME>** is used as an example. Both buttons will have similar operation procedures but one sets the round time and the other sets the rest time.

LCD Display	Action
ROUND TIME TIME NN:NN NN:NN = current value	<**SET ROUND TIME**> and <**SET REST TIME**> sets the value for the time indicated in the button title. Enter the value from the keypad and press <**ENTER**>. Press <**CLEAR**> twice to cancel the change and resume match.

Round Number

LCD Display	Action
ROUND - EDIT NN* NN = current value	<**ROUND NUMBER**> sets the value for the current round. Enter the value from the keypad and press <**ENTER**>. Press <**CLEAR**> twice to cancel the selection and resume match.

Maximum Round Number

LCD Display	Action
MAX ROUND : EDIT NN* NN = current value	<**MAX ROUND NUMBER**> sets the value for the maximum number of rounds in the match. Enter the value from the keypad and press <**ENTER**>. Press <**CLEAR**> twice to cancel the selection and resume match.

Round Number +1

LCD Display	Action
ROUND - +1 NN NN = new value	<**ROUND NUMBER +1**> increment the round number by one.

19.2 Menu

The **<MENU>** key allows the user to select from a list of options specific for each sport. The up and down arrow keys allow the user to scroll through the menu list. Pressing a key other than **<YES>**, **<NO>**, the arrow keys, and other allowed keys, exits the Menu function.

New Game

LCD Display	Action
MENU-MAIN NEW GAME?	Press **<YES>** to clear all of the program data for the last game played or the game in progress and begin running the selected sport. Press **<NO>** to resume the game in progress using the current data and exit the Menu. Press the down arrow key to scroll to the next selection.

New Code

LCD Display	Action
MENU-MAIN NEW CODE?	Press <**YES**> to begin selection of a new code from the **ENTER CODE** prompt. Press <**NO**> to resume the game in progress using the current data and exit the Menu. Press the down arrow key to scroll to the next selection.

Dimming

LCD Display	Action
MENU- DIMMING LEVEL (0-9): NN% NN = current level NONE = <**0**> 90% = <**1**> 80% = <**2**> 70% = <**3**> 60% = <**4**> 50% = <**5**> 40% = <**6**> 30% = <**7**> 20% = <**8**> 10% = <**9**>	Press **<0>** through **<9>** or use the arrow keys <🡐> <🡒>, to select the intensity for the digits on the scoreboard. Press <**NO**> to resume the game in progress using the current data, and exit the Menu. Press the down arrow key <🡓> to scroll to the next selection. **Note:** Dim levels pertain to outdoor LED products. Indoor LED and incandescent products only support one level of dimming at 50%.

Home Roster, Guest Roster

Home Roster and **Guest Roster** are entered in the same way. **Home Roster** is used as an example.

LCD Display	Action
MENU-ROSTER SELECT HOME	Press <**YES**> or the right or left arrow key to select the Home or Guest Roster submenu and show the first prompt on the LCD. Press <**NO**> to resume the game in progress using the current data and exit the Menu. Press the down arrow key to scroll to the next selection.
HOME-TEAM NAME AAAAAAAAAAAA* AAAAAAAAAAAAA = Boxers name	**The TEAM NAME (LL-2441) insert must be inserted to enter the Team Name Message Center (TNMC) settings.** The TNMC is updated after each selection is completed. Use the **COLUMNS, ROWS** and **STROKE** keys to select the **WIDTH, HEIGHT** and **FONT** of the TNMC. The defaults are 48 columns, 8 rows and single stroke. Enter up to fifteen (15) characters for the team name and press <**ENTER**>. **Reinsert the Boxing (LL-2433) insert to continue.**

Display Menu

The **DISPLAY MENU** allows the user to start and edit the segment timer or to change the brightness of the scoreboard.

LCD Display	Action
MENU-MAIN ENTER DISPLAY MENU?	Press <**YES**> to select the Display submenu and show the first prompt on the LCD. Press the down arrow key to scroll to the next selection.
MENU-DISPLAY RUN SEG TIMER Y/N	**Note:** The segment timer function is disabled while the clock is running. Press <**YES**> to exit the sport code and run the segment timer program. Press <**NO**> or the down arrow key to scroll to the next selection.
EXIT GAME ARE YOU SURE Y/N	This prompt confirms that the user wants to exit the sport code and enter the segment timer **The SEGMENT TIMER (LL-2475) insert must be inserted to enter the Segment Timer settings.** Refer to **Section 2** for more information on the Segment Timer. Press <**YES**> to exit the sport code and run the segment timer program. Press <**NO**> or the down arrow key to scroll to the next selection.
MENU-TIME OF DAY BLANK GAME DATA?	If 2-tod is selected, this message will be displayed. Press <**ENTER**> to blank all game data on the scoreboard except for the Time of Day digits.

Auto Time

The Auto Time option allows the user to choose automatic time transitions. If turned ON, the time will automatically switch between round and rest time. If OFF is selected, this change must be done manually. ON is the default and is recommended.

LCD Display	Action
AUTO TIME ON 1 – ON, 2 - OFF NN = new value	Press<**1**> to turn **ON** the Auto Time selection. Press<**2**> to turn **OFF** the Auto Time selection. Press the down arrow to scroll to the next selection. Press <**CLEAR**> to leave the menu.

Time of Day

LCD Display	Action
MENU-MAIN SELECT TOD?	Press <**YES**> or the right arrow key to select the Time of Day submenu and show the first prompt on the LCD. Press <**NO**> to resume the game in progress using the current data and exit the Menu.
MENU-TIME OF DAY 1*12, 2-24 HOUR	Press <**1**> or <**2**> to display the time of day in 12 hour (default) or 24 hour format. Press <**ENTER**> or the down arrow key to scroll to the next selection.
MENU-TIME OF DAY TOD HH:MM:SS* HH:MM:SS = current setting	Enter the time of day in hours, minutes, and seconds using the selected format on the number pad and press <**ENTER**>. Press <**ENTER**> or the down arrow key to scroll to the next selection.
MENU-TIME OF DAY 1*GAME 2-TOD * = current setting	Press <**1**> or <**2**> to display the game clock (default) or the time of day clock on the scoreboard. Press the down arrow key to exit the Menu and return to the game.

19.3 Edit

Though **<EDIT>** is not disabled for this sport code, the buttons available on the insert are able to edit the settings without the use of the **<EDIT>** button. Therefore, this manual lists no function for the **<EDIT>** button.

Section 20: Strikeout Count

Sport Insert: 0G-163409 Strikeout Count Code 5099

The Sport Insert drawing is located at the end of this section. The Team Name insert and Block Diagram drawings are located in **Appendix A**.

Reference Drawings:

Insert, Strikeout Count, Code 5099 .....**Drawing A-163409**

Refer to the information in **Section 2** to start up the console and use the sport insert. Read **Section 2** carefully to fully understand the following operation instructions.

If an insert is lost or damaged, a copy of the insert drawing located at the end of this section can be used until a replacement can be ordered.

20.1 Strikeout Keys

Season Strikeouts

LCD Display	Action
TOTAL : EDIT NNNN NNNN = current value	<**SEASON STRIKEOUTS**> sets the value for the season total strikeouts. Enter the value from the keypad and press <**ENTER**>

Game Strikeouts

LCD Display	Action
CUR VALUE : EDIT NNN* NNN = current value	<**GAME STRIKEOUTS**> sets the value for the current game strikeouts. Enter the value from the keypad and press <**ENTER**>.

Strikeouts +1, -1

LCD Display	Action
CUR VALUE : +1 NN NN = new value	<**STRIKEOUTS +1**> and <**STRIKEOUTS –1**> increment and decrement the strikeout count for the game and season by one. The selected frame for the game strikeout count is sent through the RTD port each time the key is pressed.

Display Control Keys

The display control keys will send the selected frame command through the RTD port. Pressing these keys will initiate the display of that frame on the Venus® series matrix control system. The frames will be sent as Enhanced RTD Fields and have the following protocols: 19,200 baud; 8 data bits; no parity.

The frame number for each of the keys is listed below.

<CLEAR DISPLAY> ----------Frame 1
<RUN PROMO 1>----------Frame 2
<RUN PROMO 2>----------Frame 3
<RUN PROMO 3>----------Frame 4
<RUN PROMO 4>----------Frame 5
<RUN PROMO 5>----------Frame 6
<RUN PROMO 6>----------Frame 7
<RUN PROMO 7>----------Frame 8
<RUN PROMO 8>----------Frame 9
<RUN PROMO 9>----------Frame 10
<DISPLAY STRIKEOUTS>----------Frame 11 + the strikeout count
(example: 0 strikeouts = Frame 11)
1 strikeout = Frame 12)
2 strikeouts = Frame 13)

20.2 Menu

The **<MENU>** key allows the user to select from a list of options specific for each sport. The up and down arrow keys allow the user to scroll through the menu list. Pressing a key other than **<YES>**, **<NO>**, the arrow keys, and other allowed keys exits the Menu function.

New Game

LCD Display	Action
MENU-MAIN NEW GAME?	Press <**YES**> to clear all of the program data for the last game played or the game in progress and begin running the selected sport. Press <**NO**> to resume the game in progress using the current data and exit the Menu. Press the down arrow key to scroll to the next selection.

New Code

LCD Display	Action
MENU-MAIN NEW CODE?	Press <**YES**> to begin selection of a new code from the ENTER CODE prompt. Press <**NO**> to resume the game in progress using the current data and exit the Menu. Press the down arrow key to scroll to the next selection.

Dimming

LCD Display	Action
MENU- DIMMING LEVEL (0-9): NN% NN = current level NONE = bright <0> 90% = <1> 80% = <2> 70% = <3> 60% = <4> 50% = <5> 40% = <6> 30% = <7> 20% = <8> 10% = <9>	Press **<0>** through **<9>** or use the arrow keys <←> <→>, to select the intensity for the digits on the scoreboard. Press <**NO**> to resume the game in progress using the current data, and exit the Menu. Press the down arrow key <↓> to scroll to the next selection. **Note:** Dim levels pertain to outdoor incandescent products. Indoor LED products only support one level of dimming at 50%.

20.3 Edit

Strikeouts +1, -1

LCD Display	Action
STRIKEOUTS EDIT NN NN = current setting	When <**EDIT**> and <**STRIKEOUTS +1**> or <**EDIT**> and <**STRIKEOUTS –1**> is pressed, the current value of strikeouts for the game is displayed for editing. Enter the new value for strikeouts for that game and press <**ENTER**>. This changes the value of strikeouts for the current game and adjusts the season strikeout totals. Press <**CLEAR**> to cancel the selection and return to the game in progress.

Section 21: Cricket Operations

Sport Insert: 0G-164973 Cricket Code 5599

The Sport Insert drawing is located at the end of this section. The Team Name insert and Block Diagram drawings are located in **Appendix A**.

Reference Drawings:

Insert; Cricket, Code 5599 .....**Drawing A-164973**

Refer to the information in **Section 2** to start up the console and use the sport insert. Read **Section 2** carefully to fully understand the following operation instructions.

If an insert is lost or damaged, a copy of the insert drawing located at the end of this section can be used until a replacement can be ordered.

21.1 Cricket Keys

Once the code for a cricket match is entered, the console will power up with the Home side selected for display on the scoreboard. If the Guest side is to start first the **<INNING #1>** key will need to be pressed for the Guest team. The LCD on the console will show which team is up and their team score, the wicket number, the overs remaining, and the inning number as shown below.

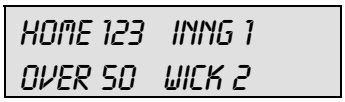

The scores of all eleven batsman and the extras will be added together for the total team score. When a new game is started all of the scores will be set to zero. The Runs +1 will increment the score for the batsman that is currently selected for that key. When a new batsman number is selected the score on the scoreboard will change to show that batsman's score.

Batsman Left, Batsman Right

<LEFT BATSMAN> and **<RIGHT BATSMAN>** set the Home and Guest Batsman numbers for the players that are currently batting.

LCD Display	Action
HOME BATSMAN LEFT NN* *NN* = current value	Press **Home** or **Guest** <**LEFT BATSMAN**> to set the left batsman's number for that team. The current setting will show on the LCD. When finished, do the same for the right batsman. Use the keypad to enter a new number and press <**ENTER**>. The number can only be set from 1 to 11. The number will default to 11 if any number above eleven is entered.

Runs +1, +4, +6

LCD Display	Action
LEFT RUNS: +1 HOME NN* *NN* = current setting	Press the appropriate run key (<**RUNS +1**>, <**RUNS +4**>, <**RUNS +6**>) to increment the total number of runs for the left or right batsman. The LCD shows which key was pressed and the new value for the corresponding batter.

Runs -1

<**RUNS -1**> is used to make corrections if an entry error has occurred.

LCD Display	Action
LEFT RUNS: -1 HOME NN *NN* = current setting	Press the appropriate <**RUNS -1**> key to decrement the total number of runs for the left or right batsman. The LCD shows which key was pressed and the new value for the corresponding batter.

Extras +1

LCD Display	Action
EXTRA RUNS: +1 HOME NN NN = current setting	Press the appropriate <**EXTRA +1**> key to increment the total number of extra runs for the Home or Guest team. The LCD shows which key was pressed and the new value for the game.

Extras -1

<EXTRAS -1> is used to make corrections if an entry error has occurred.

LCD Display	Action
EXTRA RUNS: -1 HOME NN NN = current setting	Press the appropriate <**EXTRA -1**> key to increment the total number of extra runs for the Home or Guest team. The LCD shows which key was pressed and the new value for the game.

Wickets +1

LCD Display	Action
WICKETS: +1 NN NN = current setting	Press the appropriate <**EXTRA +1**> key to decrement the wicket number for the game. The LCD shows which key was pressed and the new value for the game.

Wickets -1

<WICKETS -1> is used to make corrections if an entry error has occurred.

LCD Display	Action
WICKETS: -1 NN NN = current setting	Press the appropriate <**WICKETS -1**> key to increment the wicket number for the game. The LCD shows which key was pressed and the new value for the game.

Overs +1

LCD Display	Action
OVERS: +1 NN NN = current setting	Press the appropriate <**OVERS +1**> key to increment the number of overs for the game. The LCD shows which key was pressed and the new value for the game.

Overs -1

<OVERS -1> is used to make corrections if an entry error has occurred.

LCD Display	Action
OVERS: -1 NN NN = current setting	Press the appropriate <**OVERS -1**> key to decrement the total number of overs for the game. The LCD shows which key was pressed and the new value for the game.

Inning #1, Inning #2

LCD Display	Action
CHANGE INNING? ARE YOU SURE Y/N Y = <**ENTER**> key N = <**CLEAR**> key	Press the appropriate <**INNING #1**> or <**INNING #2**> key to select an inning for the home or guest team to score and display on the scoreboard. The console will ask if you are sure you want to change innings. Press<**ENTER**> if you want to change the inning or <**CLEAR**> if you do not.

21.2 Edit

Runs +1, +2, +3, -1

LCD Display	Action
TEAM RUNS-EDIT HOME NNN* NN = current setting	Press <**EDIT**> and any of the **RUNS** keys for the home or guest team to display the current team runs setting. Enter the correct number of runs on the number pad and press <**ENTER**>.

Extras +1, -1

LCD Display	Action
EXTRAS-EDIT HOME NN* NN = current setting	Press <**EDIT**> and one of the **EXTRAS** keys for the home or guest team to display the current extras setting. Enter the correct number of extras on the number pad and press <**ENTER**>.

Wickets +1, -1

LCD Display	Action
WICKETS-EDIT NN* NN = current setting	Press <**EDIT**> and one of the **WICKETS** keys to display the wickets setting. Enter the correct wickets number on the number pad and press <**ENTER**>.

Overs +1, -1

LCD Display	Action
OVERS-EDIT NN* NN = current setting	Press <**EDIT**> and one of the **OVERS** keys to display the overs setting. Enter the correct overs on the number pad and press <**ENTER**>.

21.3 Menu

The <**MENU**> key allows the user to select from a list of options specific for each sport. The up and down arrow keys allow the user to scroll through the menu list. Pressing a key other than <**YES**>, <**NO**>, the arrow keys, and other allowed keys exits the Menu function.

New Game

LCD Display	Action
MENU-MAIN NEW GAME?	Press <**YES**> to clear all of the program data for the last game played or the game in progress and begin running the selected sport. Press <**NO**> to resume the game in progress using the current data and exit the Menu. Press the down arrow key to scroll to the next selection.

New Code

LCD Display	Action
MENU-MAIN NEW CODE?	Press <**YES**> to begin selection of a new code from the **ENTER CODE** prompt. Press <**NO**> to resume the game in progress using the current data and exit the Menu. Press the down arrow key to scroll to the next selection.

Dimming

LCD Display	Action
MENU- DIMMING LEVEL (0-9): NN%	Press <**0**> through <**9**> or use the arrow keys <🡐> <🡒>, to select the intensity for the digits on the scoreboard. Press <**NO**> to resume the game in progress using the current data, and exit the Menu. Press the down arrow key <🡓> to scroll to the next selection. **Note:** Dim levels pertain to outdoor LED products. Indoor LED and incandescent products only support one level of dimming at 50%.
NN = current level NONE = bright <**0**> 90% = <**1**> 80% = <**2**> 70% = <**3**> 60% = <**4**> 50% = <**5**> 40% = <**6**> 30% = <**7**> 20% = <**8**> 10% = <**9**>	

Home Roster, Guest Roster

Home Roster and **Guest Roster** are entered in the same way. **Home Roster** is used as an example.

LCD Display	Action
MENU-ROSTER SELECT HOME	Press <**YES**> or the right or left arrow key to select the Home or Guest Roster submenu and show the first prompt on the LCD. Press <**NO**> to resume the game in progress using the current data and exit the Menu. Press the down arrow key to scroll to the next selection.
HOME-TEAM NAME AAAAAAAAAAAAAA* AAAAAAAAAAAAAA = Team name	**The TEAM NAME (LL-2441) insert must be inserted to enter the Team Name Message Center (TNMC) settings.** The TNMC is updated after each selection is completed. Use the **COLUMNS, ROWS** and **STROKE** keys to select the **WIDTH, HEIGHT** and **FONT** of the TNMC. The defaults are 48 columns, 8 rows and single stroke. Enter up to fifteen (15) characters for the team name and press <**ENTER**>. **Reinsert the Cricket (OG-164973) insert to continue.**

Inning Settings Menu

The **INNING SETTINGS MENU** allows the user to set the default number of overs in an inning.

LCD Display	Action
INNING SETTINGS OVERS: NN NN = current setting	Enter the number of **OVERS** to be set as the default for each inning. Press <**ENTER**> to accept the new value.

Time of Day

LCD Display	Action
MENU-MAIN SELECT TOD?	Press <**YES**> or the right arrow key to select the Time of Day submenu and show the first prompt on the LCD. Press <**NO**> to resume the game in progress using the current data and exit the Menu.
MENU-TIME OF DAY 1*12, 2-24 HOUR	Press <**1**> or <**2**> to display the time of day in 12 hour (default) or 24 hour format. Press <**ENTER**> or the down arrow key to scroll to the next selection.
MENU-TIME OF DAY TOD HH:MM:SS* HH:MM:SS = current setting	Enter the time of day in hours, minutes, and seconds using the selected format on the number pad and press <**ENTER**>. Press <**ENTER**> or the down arrow key to scroll to the next selection.
MENU-TIME OF DAY 1*GAME 2-TOD * = current setting	Press <**1**> or <**2**> to display the game clock (default) or the time of day clock on the scoreboard. Press the down arrow key to exit the Menu and return to the game.

Section 22: Water Polo Operations

Sport Insert: 0G-178439

The Sport Insert drawing is located at the end of this section. The Team Name insert and Block Diagram drawings are located in **Appendix A**.

Reference Drawings:

Block Diagrams, A/S5000/3000 Hockey.....**Drawing A-124689**
Insert, Team Name .....**Drawing A-125290**
Insert, Water Polo .....**Drawing A-178439**

Refer to the information in **Section 2** of **ED-11976** to start up the console and use the sport insert. Read **Section 2, Basic Operation** of **ED-11976** carefully to fully understand the following operation instructions.

If an insert is lost or damaged, a copy of the insert drawing located at the end of this section can be used until a replacement can be ordered.

Use the labels provided in **Appendix B** to attach the correct code number label to the sport insert in the appropriate location. Write the code number in the space provided below.

Write the correct code number here.

If you do not know the code number to enter for your scoreboard, refer to **Appendix B** in this manual. If you do not know the model number of your scoreboard, refer to the **Installation and Maintenance** manual provided with the scoreboard.

22.1 Water Polo Keys

Time Out On/Off
<TIME OUT ON/OFF> stops and starts the time out clock. The length of both the full and partial time outs can also be changed when the time out clock is stopped.

Note 1: Only the time outs configured in the **EDIT SETTINGS** function are displayed on the LCD and available for selection.

Note 2: The up and down arrow keys can also be used to select the full and partial time outs (please refer to the table on the following page).

LCD Display	Action
TIME OUT-SELECT FULL MM:SS MM:SS = minutes, seconds	Press <**TIME OUT ON/OFF**> to display the configured time for full time out length. To accept the full time out length, press <**YES**>. To decline the selection of the full time out length, press <**NO**>. To change the full time out length, enter the new length in minutes and seconds on the number pad and press <**ENTER**>. Press <**CLEAR**> twice to clear changes and return to the game.
TIME OUT-SELECT PARTIAL MM:SS MM:SS = minutes, seconds	Press <**TIME OUT ON/OFF**> a second time to display the configured time for partial time out length. To accept the partial time out length, press <**YES**>. To decline the selection of the partial time out length, press <**NO**>. To change the partial time out length, enter the new length in minutes and seconds on the number pad and press <**ENTER**>. Press **<CLEAR>** twice to clear changes and return to the game.

Enable Penalty Clocks

Press **<ENABLE PENALTY CLOCKS>** to allow the penalty clocks to count when the main clock is on.

Disable Penalty Clocks

Press **<DISABLE PENALTY CLOCKS>** to disable the penalty clocks from counting when the main clock is on.

Period +1

LCD Display	Action
PERIOD +1 N *N* = current setting	Press <**PERIOD +1**> to increment the period number. A prompt showing period number displays briefly.

Time Out

The home and guest **<TIME OUT>** keys are used to decrement the number of time outs remaining and start the time out clock. The scoreboard indicator is turned on when the type of time out is selected (full or partial). The scoreboard indicator is turned off when the time out clock expires or is stopped.

Note 1: Only the types (full or partial) of time outs that were configured in the **EDIT SETTINGS** function are displayed on the LCD and available for selection.

Note 2: The up and down arrow keys can also be used to select the full and partial time outs (please refer to the table on the following page).

LCD Display	Action
TIME OUT-HOME FULL? N N = current setting	Press <**TIME OUT**> to display the number of full time outs remaining. To accept the full time out and start the time out clock, press <**YES**>. Full time out decrements. To decline the selection of a full time out, press **<NO>**. Full time out does not decrement. **Note:** The up and down arrow keys can also be used to select the full and partial time outs.
TIME OUT-HOME PARTIAL? N N = current setting	Press <**TIME OUT**> a second time to display the number of partial time outs remaining. To accept the partial time out and start the time out clock, press <**YES**>. Partial time out decrements. To decline the selection of a partial time out, press **<NO**>. Partial time out does not decrement. **Note:** The up and down arrow keys can also be used to select the full and partial time outs.
TIME OUT-HOME NO TIME OUTS	This message appears when there are no time outs left.

Player Penalty Start

LCD Display	Action
HOME PLYR/PEN PLAYER 01* *NN* = current setting	Press <**PLAYER PENALTY START**> to start a new penalty time for the home or guest team. The penalty time will start to count immediately. On the number pad, enter the jersey number of the player with the penalty, and press <**ENTER**>.
HOME PLYR/PEN PENALTY #N* *N* = penalty number	Enter the penalty number of this penalty, and press <**ENTER**>.

Set Main Clock

LCD Display	Action
MAIN CLOCK -SET CURR MM:SS.T* *MM:SS.T* = minutes, seconds, tenths of a second	After the main clock has been stopped, press <**SET MAIN CLOCK**> to display the current time of the main clock. To change the time, enter the desired time on the number pad and press <**ENTER**>. Press <**CLEAR**> twice to clear changes and return to the game.

Score

The home and guest **<SCORE +1, -1>** keys are used to increment and decrement their respective totals.

LCD Display	Action
TEAM SCORE-EDIT HOME NNN NNN = current setting	Press the appropriate key to increment or decrement the total for the home or guest team. For example, <**SCORE +1, -1**>. Enter the correct number on the number pad and press <**ENTER**>. The LCD shows which key was pressed and the new value for the team score of the corresponding team.

Clear All Penalties

Press **<CLEAR ALL PENALTIES>** to delete all of the penalties for the home or guest team.

LCD Display	Action
HOME PLYR/PEN CLEAR ALL Y/N?	Press <**YES**> to clear the penalties for all players in the roster. Press <**NO**> to decline the selection and return to the game.

Delete Penalty

Press **<DELETE PENALTY>** to delete a single penalty for the home or guest team.

LCD Display	Action
HOME DEL PEN? 1 PNN PN NN:NN NN = current setting	Use the up and down arrow keys to scroll to the correct penalty and press <**ENTER**>. Press <**CLEAR**> to decline the selection and return to the game.

22.2 Edit

The **<EDIT>** key allows the user to select and edit the following scoreboard fields. Press **<EDIT>** and the key for the home or guest field to be edited.

Time Out

Note 1: Only the time outs configured in the **EDIT SETTINGS** function are displayed on the LCD and available for selection.

Note 2: The up and down arrow keys can also be used to select the full and partial time outs.

LCD Display	Action
TIME OUT-HOME FULL N* *N* = current setting	Press <**EDIT**> <**TIME OUT**> for the home or guest team to display the current setting of full time outs remaining. Enter the correct number of full time outs on the number pad and press <**ENTER**>.
TIME OUT-HOME PARTIAL N* *N* = current setting	Press <**EDIT**> <**TIME OUT**> for the home or guest team a second time or the down arrow key to display the current setting of full time outs remaining. Enter the correct number of partial time outs on the number pad and press <**ENTER**>.

Score

The home and guest **<SCORE +1, -1>** keys are all edited in the same way.

LCD Display	Action
TEAM SCORE-EDIT HOME NNN *NNN* = current setting	Press <**EDIT**> and the appropriate statistic key to display the current setting. For example, <**SCORE +1, -1**>. Enter the correct number on the number pad and press <**ENTER**>.

Period +1

LCD Display	Action
PERIOD EDIT N N = current setting	Press <**EDIT**> <**PERIOD +1**> to display the current quarter setting. Enter the correct quarter number on the number pad and press <**ENTER**>. The full time outs are reset.

Time Out On/Off

LCD Display	Action
TIME OUTS-EDIT FULL MM:SS MM:SS = minutes, seconds	Press <**EDIT**> <**TIME OUT ON/OFF**> to display the current time setting for full time outs. Enter the correct time on the number pad and press <**ENTER**>.
TIME OUT- EDIT PARTIAL MM:SS MM:SS = minutes, seconds	Press <**TIME OUT ON/OFF**> a second time or the down arrow key to display the configured time for partial time out length. Enter the correct time on the number pad and press <**ENTER**>.

22.3 Menu

The **<MENU>** key allows the user to select from a list of options specific for each sport. The up and down arrow keys allow the user to scroll through the menu list. Pressing a key other than **<YES>**, **<NO>**, the arrow keys, and other allowed keys, exits the Menu function.

The **Menu** function should be used at the beginning of each new game to edit the Home and Guest Rosters.

New Game

LCD Display	Action
MENU-MAIN NEW GAME?	Press <**YES**> to clear all of the program data for the last game played or the game in progress and begin running the selected sport. Press <**NO**> to resume the game in progress using the current data and exit the Menu. Press the down arrow key to scroll to the next selection.

New Code

LCD Display	Action
MENU-MAIN NEW CODE?	Press <**YES**> to begin selection of a new code from the ENTER CODE prompt. Press <**NO**> to resume the game in progress using the current data and exit the Menu. Press the down arrow key to scroll to the next selection.

Home Roster, Guest Roster

Home Roster and **Guest Roster** are entered in the same way. **Home Roster** is used as an example.

LCD Display	Action
MENU-ROSTER SELECT HOME	Press <**YES**> or the right or left arrow key to select the Home or Guest Roster submenu and show the first prompt on the LCD. Press <**NO**> to resume the game in progress using the current data and exit the Menu. Press the down arrow key to scroll to the next selection.
HOME-TEAM NAME AAAAAAAAAAAAA*	**The TEAM NAME (LL-2441) insert must be inserted to enter the Team Name Message Center (TNMC) settings.** The TNMC is updated after each selection is completed. Use the **COLUMNS, ROWS** and **STROKE** keys to select the **WIDTH, HEIGHT** and **FONT** of the TNMC. The defaults are 48 columns, 8 rows and single stroke. Enter up to fifteen (15) characters for the team name and press **<ENTER>.** **Reinsert the HOCKEY (LL-2436) insert to continue.**

Display Menu

The **DISPLAY MENU** allows the user to start and edit the segment timer or to change the brightness of the scoreboard.

LCD Display	Action
MENU-MAIN ENTER DISPLAY MENU?	Press **<YES>** to select the Display submenu and show the first prompt on the LCD. Press the down arrow key to scroll to the next selection.
MENU-DISPLAY RUN SEG TIMER Y/N	**Note:** The segment timer function is disabled while the clock is running. Press <**YES**> to exit the sport code and run the segment timer program. Press <**NO**> or the down arrow key to scroll to the next selection.
EXIT GAME ARE YOU SURE Y/N	This prompt confirms that the user wants to exit the sport code and enter the segment timer **The SEGMENT TIMER (LL-2475) insert must be inserted to enter the Segment Timer settings.** Refer to **Section 3** for more information on the segment timer. Press <**YES**> to exit the sport code and run the segment timer program. Press <**NO**> or the down arrow key to scroll to the next selection.

(Continued on next page)

(Continued from previous page)

LCD Display	Action
MENU- DIMMING LEVEL (0-9): NN% NN = current level NONE = bright <0> 90% = <1> 80% = <2> 70% = <3> 60% = <4> 50% = <5> 40% = <6> 30% = <7> 20% = <8> 10% = <9>	Press **<0>** through **<9>** or use the arrow keys <🡐> <🡒>, to select the intensity for the digits on the scoreboard. Press <**NO**> to resume the game in progress using the current data, and exit the Menu. Press the down arrow key <🡓> to scroll to the next selection. **Note:** Dim levels pertain to outdoor LED products. Indoor LED and incandescent products only support one level of dimming at 50%.

Edit Settings

LCD Display	Action
MENU-MAIN EDIT SETTINGS?	Press <**YES**> or the right or left arrow key to select the settings submenu and show the first prompt on the LCD. Press <**NO**> to resume the game in progress using the current data and exit the Menu. Press the down arrow key to scroll to the next selection.

Time of Day

LCD Display	Action
MENU-MAIN SELECT TOD?	Press <**YES**> or the right arrow key to select the Time of Day submenu and show the first prompt on the LCD. Press <**NO**> to resume the game in progress using the current data and exit the Menu.
MENU-TIME OF DAY 1*12, 2-24 HOUR	Press <**1**> or <**2**> to display the time of day in 12 hour (default) or 24 hour format. Press <**ENTER**> or the down arrow key to scroll to the next selection.
MENU-TIME OF DAY TOD HH:MM:SS* HH:MM:SS = current setting	Enter the time of day in hours, minutes, and seconds using the selected format on the number pad and press <**ENTER**>. Press <**ENTER**> or the down arrow key to scroll to the next selection.
MENU-TIME OF DAY 1*GAME 2-TOD * = current setting	Press <**1**> or <**2**> to display the game clock (default) or the time of day clock on the scoreboard. Press the down arrow key to exit the Menu and return to the game.
MENU-TIME OF DAY BLANK GAME DATA?	If 2-tod is selected, this message will be displayed. Press <**ENTER**> to blank all game data on the scoreboard except for the Time of Day digits.

22.4 Settings

The user can edit the following settings when **EDIT SETTINGS** has been selected from the Main Menu.

Main Clock

Note 1: The settings entered for Main Clock are used with the **<SET MAIN CLOCK>** key.

Note 2: The period, break, and overtime lengths are used differently depending on the direction of the main clock. For count down, the main clock is set to the selected length, decrements towards zero, and stops at zero. For count up, the main clock is set to zero, increments towards the selected length, and stops when the selected length is reached.

LCD Display	Action
MAIN CLOCK-MODE TENTH SECOND? N N = current setting	When the main clock is set to count down and tenths of a second is selected, the main clock displays in tenths of a second remaining when the time is below one minute. Press <**YES**> to set the main clock to display tenths of a second. Press <**NO**> to display whole seconds.
MAIN CLOCK-TIME PERIOD MM:SS MM:SS = current setting	Enter the correct amount of time per period in minutes and seconds on the number pad and press <**ENTER**>. For example, 20:00 per period. **Note:** Pressing <**ENTER**> to select the period time as the main clock setting will increment the current period number if the clock value was previously zero.

(Continued on next page)

(Continued from previous page)

LCD Display	Action
MAIN CLOCK-TIME BREAK MM:SS MM:SS = current setting	Set the amount of time between periods. Enter the correct amount of time for break length in minutes and seconds on the number pad and press <**ENTER>**. For example, 1:00.
MAIN CLOCK-TIME OVERTIME MM:SS MM:SS = current setting	Set the amount of time for the overtime periods. Enter the correct amount of time for overtime periods in minutes and seconds on the number pad and press <**ENTER**>. For example, 5:00.

Shot Clock

LCD Display	Action
SHOT CLOCK-TIME RESET MM:SS* MM:SS = current setting	This setting is used by the **RESET** button on the remote shot clock control console. **Note:** The current setting for the RESET time displays on the LCD until the first number key is pressed. Enter the correct amount of reset time in minutes and seconds on the number pad and press <**ENTER**>. For example, 00:45.

(Continued on next page)

(Continued from previous page)

LCD Display	Action
SHOT CLOCK-MODE SYNC W/ MAIN?	Press <**YES**> to synchronize the shot clock with the main clock. If <**STOP**> for the main clock is pressed while the main and shot clocks are running, the shot clock stops. The shot clock restarts when <**START**> is pressed for the main clock. Press <**NO**> to allow the shot clock to run independently of the main clock. The shot clock starts and stops only with the switch on the remote shot clock control console
SHOT CLOCK-MODE AUTO BLANK?	Press **<YES**> to blank the shot clock time when the shot clock time is greater than or equal to the main clock time. The shot clock is reset and stopped when the display is blanked to eliminate inadvertent sounding of shot clock horn. Press <**NO**> to display the shot clock time at all times.

Penalty Time

Default times can be set for the minor and major penalty keys. The minor penalty time is used as the default when first entering the player penalty function.

LCD Display	Action
PENALTY TIME SET MM:SS MM:SS = current setting	Enter the correct default time for a penalty in minutes and seconds on the number pad and press the <**ENTER**> key. For example, 0:25. The penalty time is used as the default when pressing the player penalty start function.

Time Outs

Note 1: If a full or partial time out is not needed for the HOME or GUEST **<TIME OUT>** keys, enter zero for the number of time outs.

Note 2: If a full or partial time out is not needed for **<TIME OUT ON/OFF>,** enter zero for the time.

Note3: The number for each type of time out must be manually entered for an overtime period using the **<EDIT> <TIME OUT>** key sequence for each team.

LCD Display	Action
TIME OUTS-MODE FULL N* *N* = current setting	Enter the number of full time outs on the number pad and press <**ENTER**>.
TIME OUTS-TIME FULL MM:SS* *MM:SS* = current setting	Enter the amount of time for a full time out in minutes and seconds on the number pad and press <**ENTER**>. For example, 1:00.
TIME OUTS-MODE SHOW ON MAIN? N *N* = current setting	Press <**YES**> to display the time out time on the LCD and the main clock digits of the scoreboard while the time out clock is active. Press <**NO**> to display the time out time on the LCD only.

Switch Output

The All Sport 5000 series console has a switch that can be used to drive a number of different devices. The switch can be configured to operate under different settings. The default setting is 1-CLOCK= 0.

To display the switch setting that you want to select:

Press the number (0,1,2,3) key as a shortcut or use the left and right arrow keys to scroll to the desired setting.

Press **<YES>** to select the new setting.

Press **<NO>** or the down arrow key to leave the switch setting and display the next prompt.

The possible settings for the switch output are as follows:

Setting	Result
0 - DISABLED SWITCH OUTPUT=N 0-DISABLED? *N* = current setting	The switch remains open at all times and any external devices are disabled.
1-CLOCK = 0 SWITCH OUTPUT=N 1-CLOCK =0? *N* = current setting	In count down mode, the switch closes when the main clock reaches zero and remains closed until a nonzero value is entered. In count up mode, the switch closes when the main clock reaches the proper period, break, or overtime length and opens when any other value is entered.
2-CLOCK STOP SWITCH OUTPUT=N 2-CLOCK STOP? *N* = current setting	The switch closes when the main clock is stopped and opens when the main clock is running. External devices are disabled when the main clock is running.
3-MAIN HORN SWITCH OUTPUT=N 3-MAIN HORN? *N* = current setting	The switch closes when the main horn sounds. This could be when the auto horn is enabled and the main clock reaches zero or when <**HORN**> is pressed.

Default Settings

Write the settings for this installation in the space (Custo) provided.

Setting	Default	Custom 1	Custom 2	Custom 3
Tenth of a Second	Yes			
Period Length	15:00			
Break Length	10:00			
Overtime Length	5:00			
Minor Penalty	0:25			
Full Time Outs	1			
Full Time Out	1:00			
Partial Time Outs	0			
Partial Time Out	0:00			
Switch Output	1-Clock = 0			

Appendix A: Reference Drawings

In this appendix, the following drawings are filed in numerical order by drawing number.

Track/Football SCBD w/ Finish Lynx, in Press Box (option #3) ..... **Drawing A-095152**
Track/Football SCBD w/ Finish Lynx, in Field ..... **Drawing A-095153**
Track/Football SCBD w/ Finish Lynx, in Press Box (option #2) ..... **Drawing A-095154**
Rear View, A/S 5010 Connector Assignments ..... **Drawing A-102142**
LAYOUT; 8 COLUMN DRIVER III ..... **Drawing A-123941**
Block Diagram, A/S 5000/3000 BB, VB & WR #1 ..... **Drawing A-124686**
Block Diagram, A/S 5000/3000 BB, VB & WR #3 ..... **Drawing A-124688**
Block Diagram, A/S 5000/3000 Hockey ..... **Drawing A-124689**
Block Diagram, A/S 5000/3000 Outdoor Sports ..... **Drawing A-124690**
A/S 5000 Track w/ OmniSport Timer ..... **Drawing A-125039**
Schematic, Dual ¼" Phone J-Box w/Shunt Jack ..... **Drawing A-125316**
Block Diagram, A/S 5000 BB, VB & WR #2 ..... **Drawing A-125415**
All Sport 5000, 25 Pin PCB J-Box Wiring ..... **Drawing A-125416**
Block Diagram; A/S 3000 or 5000 BB, VB & WR #4 ..... **Drawing A-125417**
Channel Selection; Single Control Console, Gen IV ..... **Drawing A-180566**
Channel Selection; Single Broadcast Group, Gen IV ..... **Drawing A-180922**
Channel Selection; Multiple Broadcast Group, Gen IV ..... **Drawing A-180923**
Speed Adjust Calculations, Radar Gun ..... **Drawing A-243741**

TRACK SYSTEM RISER DIAGRAM

TRACK/FOOTBALL SCBD WITH FINISH LYNX AND ALL SPORT 4000

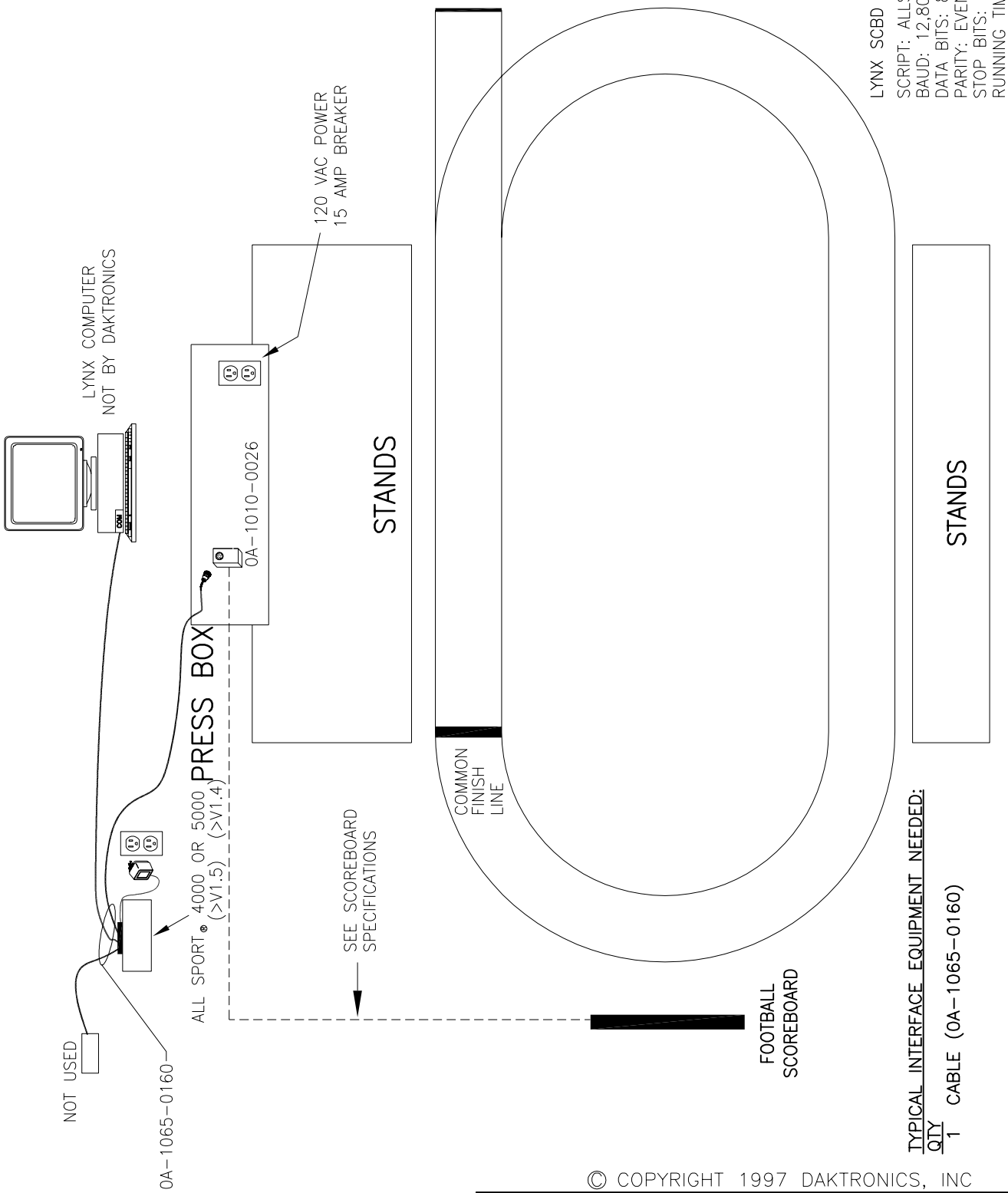

© COPYRIGHT 1997 DAKTRONICS, INC

REV.	DATE	DESCRIPTION	BY	APPR.
02	05SEP01	CHANGED TEXT	GWS	JWARNE
1	15 SEP 98	ADDED LYNX SCBD OUTPUT SETTINGS	CJB	

DAKTRONICS, INC. BROOKINGS, SD 57006

PROJ: TRACK SYSTEM RISER DIAGRAM OPTION #3

TITLE: TRACK/FOOTBALL SCBD W/ FINISH LYNX, IN PRESSBOX

DES. BY: DRAWN BY: JWHITAK DATE: 07-28-97

REVISION APPR. BY:

SCALE: 1=1

1125-P08A-95152

TRACK SYSTEM RISER DIAGRAM

TRACK/FOOTBALL SCBD W/ FINISH LYNX

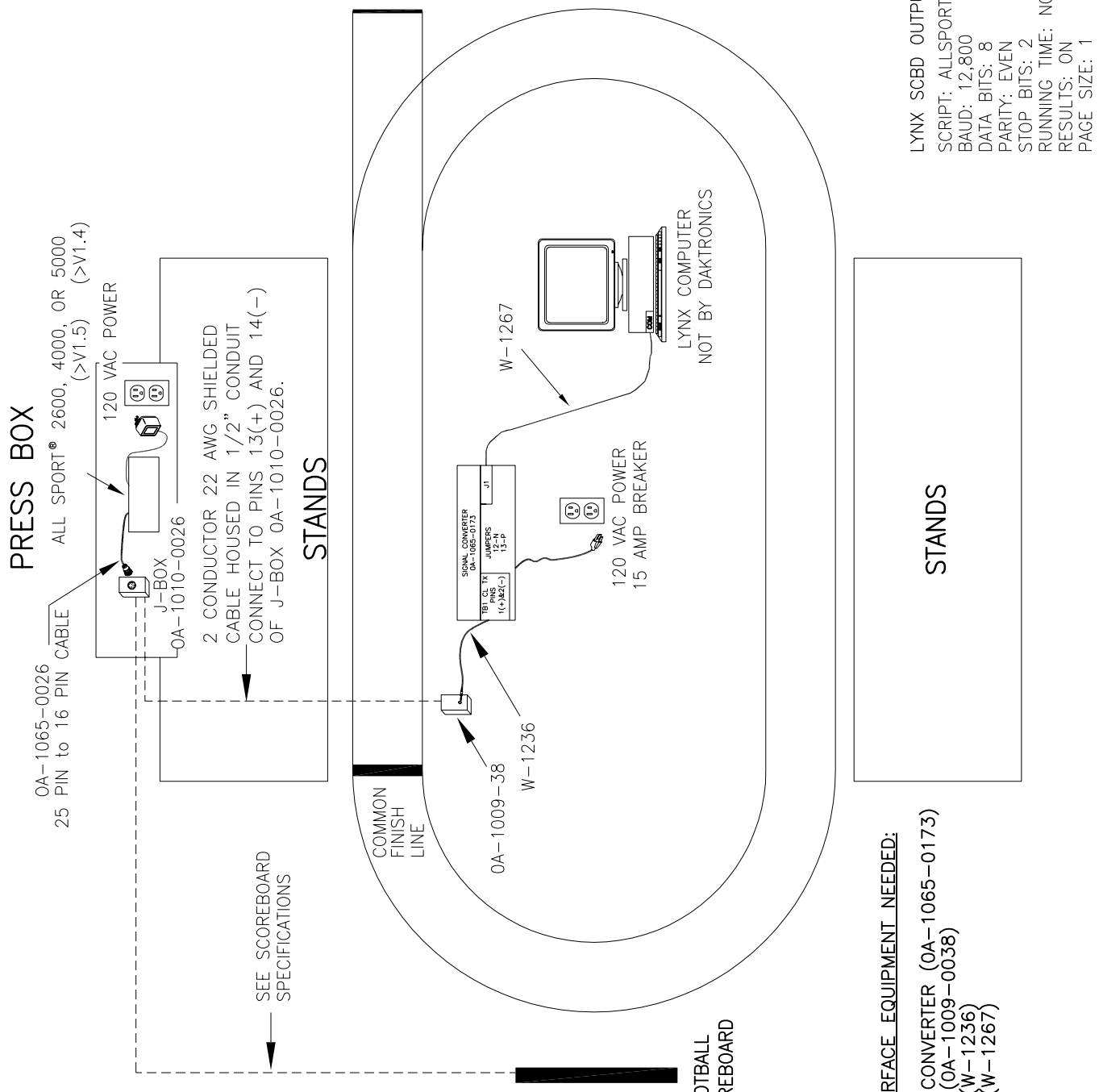

LYNX SCBD OUTPUT SETTINGS:
SCRIPT: ALLSPORT.LSS
BAUD: 12,800
DATA BITS: 8
PARITY: EVEN
STOP BITS: 2
RUNNING TIME: NORMAL
RESULTS: ON
PAGE SIZE: 1

TYPICAL INTERFACE EQUIPMENT NEEDED:

QTY	
1	SIGNAL CONVERTER (OA-1065-0173)
1	J-BOX (OA-1009-0038)
1	CABLE (W-1236)
1	CABLE (W-1267)

© COPYRIGHT 1997 DAKTRONICS, INC

REV.	DATE	DESCRIPTION	BY	APPR.
03	15 SEP 03	CHANGED SIGNAL CONVERTER DRAWING TO SHOW JACK NUMBERS AND PINS.	LWS	
02	05SEP01	CHANGED SOME TEXT	GWS	JWARNE
01	15 SEP 98	ADDED LYNX SCBD OUTPUT SETTINGS	CJB	

DAKTRONICS, INC. BROOKINGS, SD 57006

PROJ: TRACK SYSTEM RISER DIAGRAM OPTION #1

TITLE: TRACK/FOOTBALL SCBD W/ FINISH LYNX, IN FIELD

DES. BY: DRAWN BY: JWHITAK DATE: 07-28-97

REVISION 03 APPR. BY: SCALE: 1=1

1125-P08A-95153

TRACK SYSTEM RISER DIAGRAM

TRACK/FOOTBALL SCBD W/ FINISH LYNX

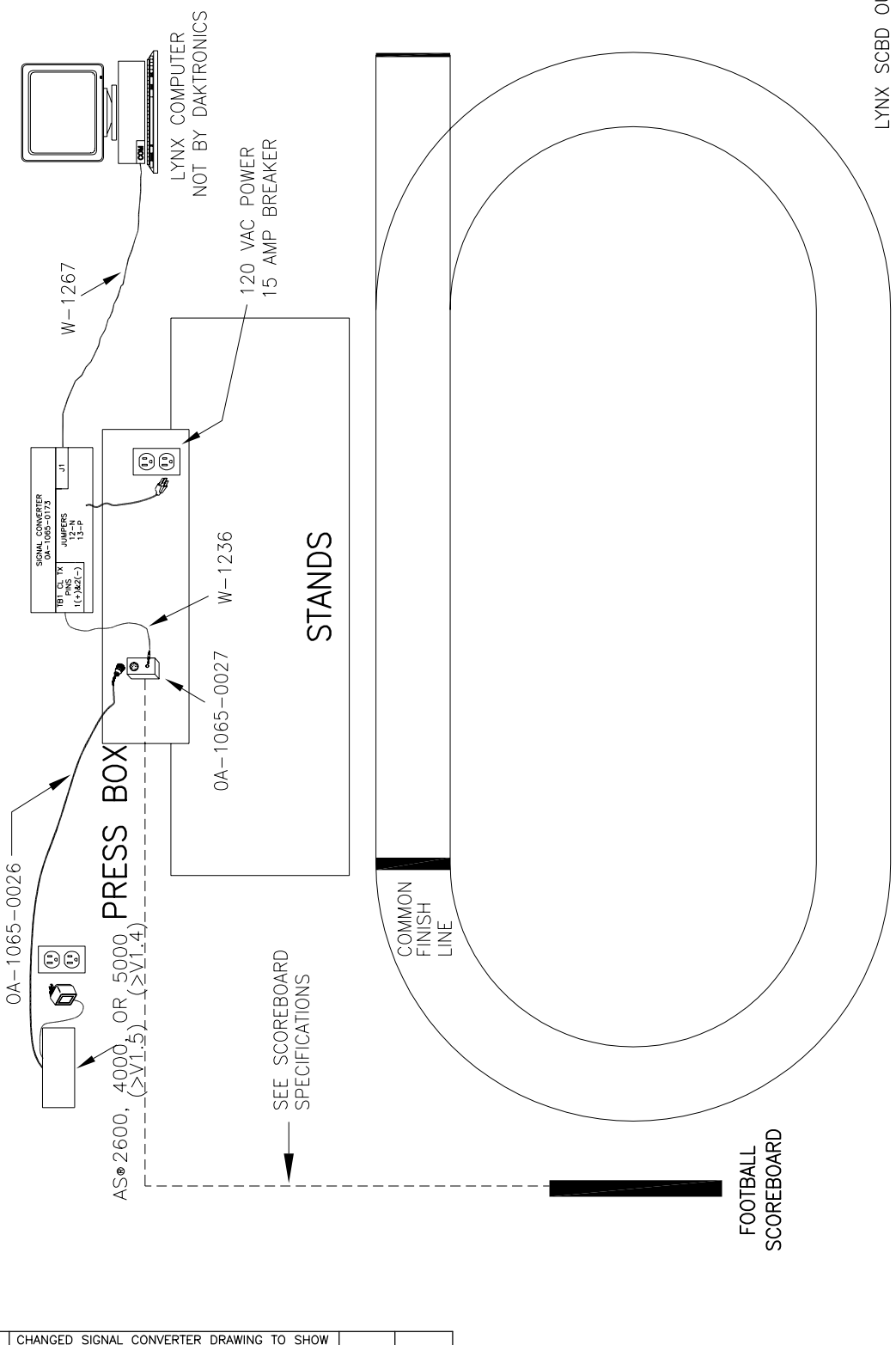

LYNX SCBD OUTPUT SETTINGS:
SCRIPT: ALLSPORT.LSS
BAUD: 12,800
DATA BITS: 8
PARITY: EVEN
STOP BITS: 2
RUNNING TIME: NORMAL
RESULTS: ON
PAGE SIZE: 1

TYPICAL INTERFACE EQUIPMENT NEEDED:

QTY	
1	SIGNAL CONVERTER (0A-1065-0173)
1	J-BOX (0A-1065-0027)
1	CABLE (W-1236)
1	CABLE (W-1267)

REV.	DATE	DESCRIPTION	BY	APPR.
04	15 SEP 03	CHANGED SIGNAL CONVERTER DRAWING TO SHOW JACK NUMBERS AND PINS.	LWS	
03	6 JUNE 01	ADDED AS 5000 OPTION	JDB	
02	15 SEP 98	ADDED LYNX SCBD OUTPUT SETTINGS	CJB	
01	26 JUNE 98	REVISED PART NUMBERS.	HBB	

© COPYRIGHT 1997 DAKTRONICS, INC

DAKTRONICS, INC. BROOKINGS, SD 57006

PROJ: TRACK SYSTEM RISER DIAGRAM OPTION #2

TITLE: TRACK/FOOTBALL SCBD W/ FINISH LYNX, IN PRESS BOX

DES. BY: DRAWN BY: JWHITAK DATE: 07-28-97

REVISION 04 | APPR. BY: | SCALE: 1=1

1125-P08A-95154

ALL SPORT 5010

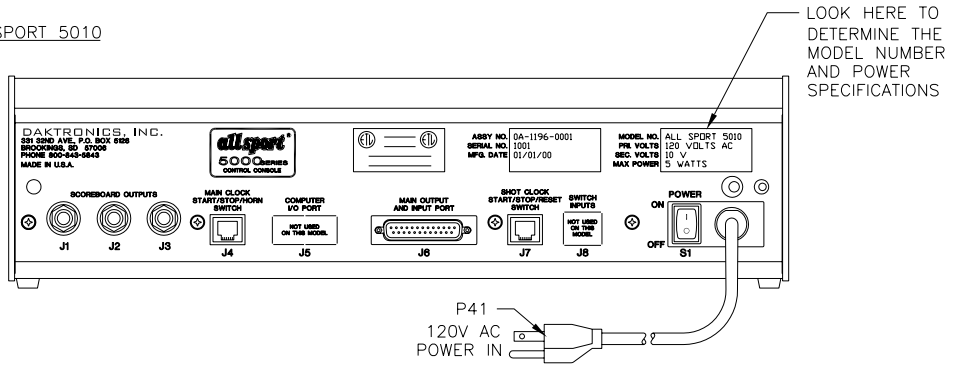

ALL SPORT 5012

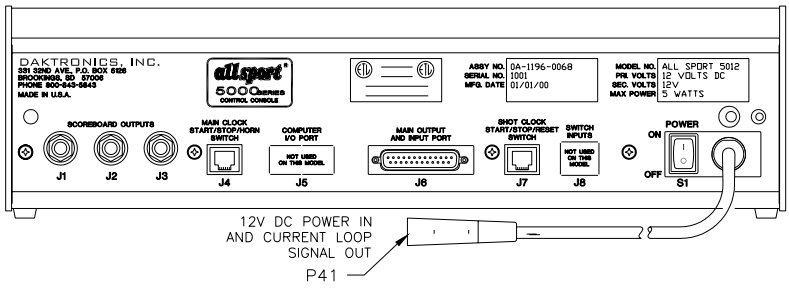

ALL SPORT 5020

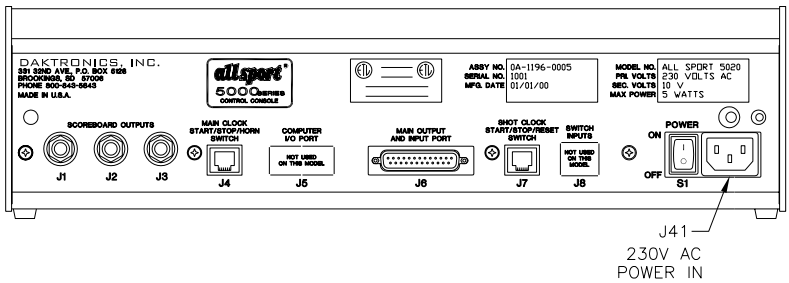

J1–J3 – OUTPUT #1–#3	
CONTACT	FUNCTION
TIP	CURRENT LOOP OUTPUT 1 +
RING	CURRENT LOOP OUTPUT 1 –
SHAFT	GND

J4 – START/STOP/HORN	
PIN #	FUNCTION
1	SWITCH INPUT 2 –
2	SWITCH INPUT 1 –
3	RELAY OUTPUT –
4	RELAY OUTPUT +
5	SWITCH INPUT 1 +
6	SWITCH INPUT 2 +

J6 – MAIN PORT	
PIN #	FUNCTION
1	EARTH
2	RS232 RECEIVE +
3	RS232 TRANSMIT +
4	NOT USED
5	NOT USED
6	NOT USED
7	C. L. OUTPUT 4 –/RS232 GND
8	SWITCH INPUT 1 +
9	CURRENT LOOP INPUT +
10	CURRENT LOOP INPUT –
11	RELAY OUTPUT +
12	NOT USED
13	NOT USED
14	CURRENT LOOP OUTPUT 1 +
15	CURRENT LOOP OUTPUT 1 –
16	CURRENT LOOP OUTPUT 2 +
17	CURRENT LOOP OUTPUT 2 –
18	CURRENT LOOP OUTPUT 3 +
19	CURRENT LOOP OUTPUT 3 –
20	NOT USED
21	SWITCH INPUT 1 –
22	CURRENT LOOP OUTPUT 4 +
23	RELAY OUTPUT –
24	10V AC/DC INPUT–P
25	10V AC/DC INPUT–N

J7 – SHOT/PLAY CLOCK	
PIN #	FUNCTION
1	SWITCH INPUT 5 –
2	SWITCH INPUT 4 –
3	SWITCH INPUT 3 –
4	SWITCH INPUT 3 +
5	SWITCH INPUT 4 +
6	SWITCH INPUT 5 +

FOR STANDARD CODES, THESE FUNCTIONS ARE USUALLY ASSIGNED TO THE FOLLOWING TASKS:

FUNCTION	USUAL TASK
SW IN 1	MAIN CLOCK STOP/START
SW IN 2	MAIN CLOCK HORN
SW IN 3	NOT USED
SW IN 4	SHOT/PLAY CLOCK STOP
SW IN 5	SHOT/PLAY CLOCK RESET
SW OUT	CLOCK STOP OUT
CL OUT 1	SCOREBOARD OUTPUT
CL OUT 2	SCOREBOARD OUTPUT
CL OUT 3	SCOREBOARD OUTPUT
CL OUT 4	DATA STREAM

ALL SPORT 5000 SERIES MODELS	
MODEL #	FUNCTION
5010	120V, STANDARD PROGRAMMING
5020	230V, STANDARD PROGRAMMING

REV.	DATE	DESCRIPTION	BY	APPR.
3	05 OCT 01	ADDED A/S 5012 TO LAYOUT CHANGED DWG SCALE FROM 1=3 TO 1=4	NW	
2	24 APR 99	CHANGED TO BE FOR A/S 5010 CONSOLES ONLY	EB	
1	13 APR 99	ADDED J10 ADDED A/S 5010 LAYOUT	EB	

DAKTRONICS, INC. BROOKINGS, SD 57006

PROJ: ALL SPORT 5000 SERIES CONSOLES

TITLE: REAR VIEW, A/S 5010 CONNECTOR ASSIGNMENTS

DES. BY: EBRAVEK DRAWN BY: EBRAVEK DATE: 27APR98

REVISION APPR. BY:

SCALE: 1=4

1196-R04A-102142

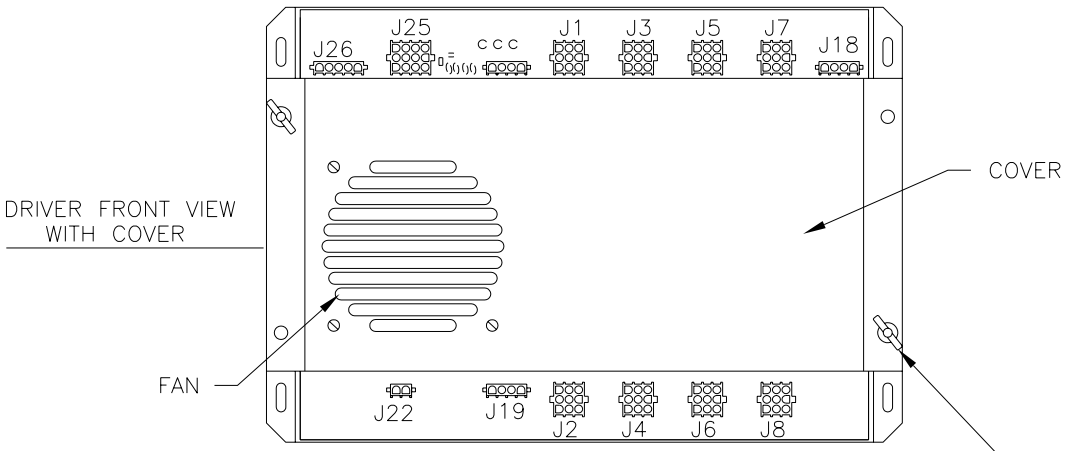

J25

PIN	FUNCTION	PIN	FUNCTION
1	GND	7	GND
2	ADDR 0 –	8	ADDR 4 –
3	ADDR 1 –	9	ADDR 5 –
4	GND	10	GND
5	ADDR 2 –	11	ADDR 6 –
6	ADDR 3 –	12	CLMN SWAP

DS1–RX
DS2–PWR
DS3–STATUS

J1 – J8

PIN	FUNCTION
1	SEG C
2	SEG B
3	SEG A
4	SEG F
5	SEG E
6	SEG D
7	COMMON
8	SEG H
9	SEG G

J17

PIN	FUNCTION
1	SIG IN +
2	SIG IN –
3	SIG OUT +
4	SIG OUT –

J26

PIN	FUNCTION
1	GND
2	PROT 0 –
3	PROT 1 –
4	PROT 2 –
5	TOD–N

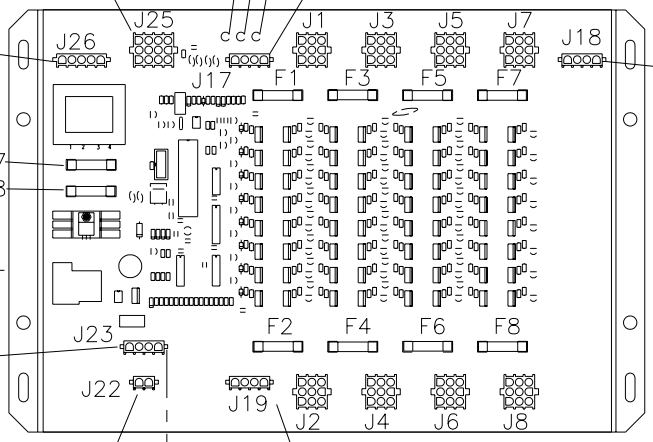

DRIVER FRONT VIEW
WITH COVER REMOVED

J18

PIN	FUNCTION
1	LAMP NEUT
2	LAMP NEUT
3	LAMP HOT 1, 3, 5, 7
4	LAMP HOT 2, 4, 6, 8

J23

PIN	FUNCTION
1	FAN SW HOT
2	NEUT
3	FAN HOT
4	NEUT

J22

PIN	FUNCTION
1	NORM OPEN
2	COMMON

PLUG FROM FAN IN COVER
CONNECTS TO J23

J19

PIN	FUNCTION
1	NEUTRAL
2	NEUTRAL
3	120V HOT
4	120V HOT

F1 THRU F8 ARE TYPE AGC–10, DAKTRONICS PART NUMBER F–1006.
F17 THRU F18 ARE TYPE AGC–1/2, DAKTRONICS PART NUMBER F–1000

REV.	DATE	DESCRIPTION	BY	APPR.
4	2 OCT 00	CHANGED J25 & J26 TEXT –5 V TO GND	NSW	
3	29 SEP 00	CORRECTED J25 TABLE. CHANGED J26 TABLE PIN 5 FROM PROT 3 TO T.O.D.	AVB	
2	2 JUNE 00	CORRECTED J26 PINOUT TABLE	EB	
1	30 NOV 99	REMOVED DIMMING HEADER AND TABLE	EB	

DAKTRONICS, INC. BROOKINGS, SD 57006

PROJ:

TITLE: LAYOUT; 8 COLUMN DRIVER III

DES. BY: EB DRAWN BY: EB DATE: 11 NOV 99

REVISION APPR. BY:

SCALE: 1=5

1033-R04A-123941

TYPICAL INSTALLATION SHOWN

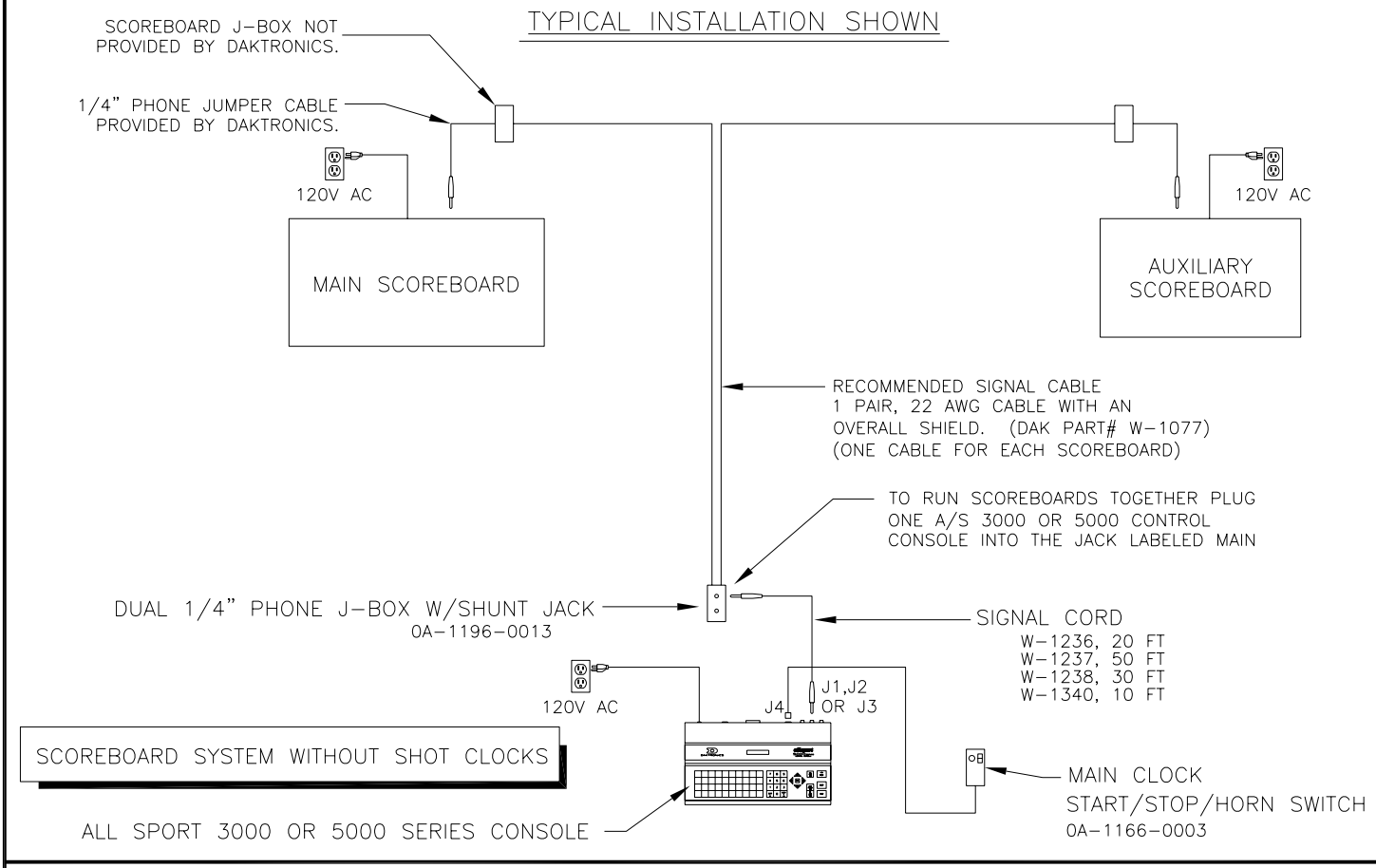

SEPARATE SCOREBOARD CONTROL

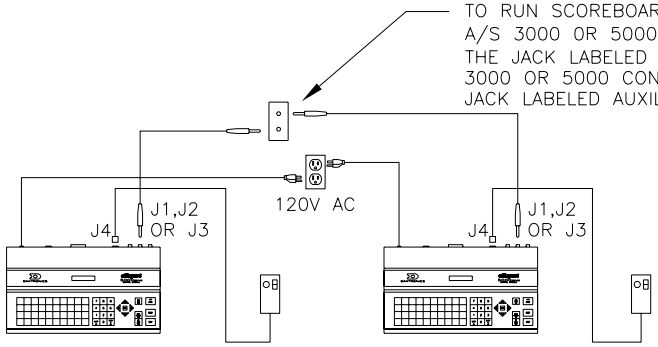

0A-1196-0013 J-BOX

TYPICAL 0A-1196-0013 J-BOX WIRING

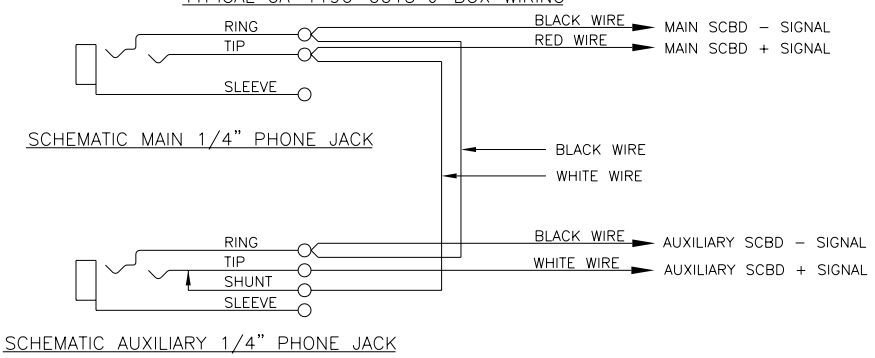

SCHEMATIC MAIN 1/4" PHONE JACK

SCHEMATIC AUXILIARY 1/4" PHONE JACK

REV.	DATE	DESCRIPTION	BY	APPR.
01	26 APR 00	ADDED A/S 3000	DKD	

DAKTRONICS, INC. BROOKINGS, SD 57006

PROJ: ALL SPORT 5000

TITLE: BLOCK DIAGRAM, A/S 3000 OR 5000 BB, VB & WR #1

DES. BY: DRAWN BY: E BRAVEK DATE: 29 NOV 99

REVISION APPR. BY:

SCALE: NONE

1196-R04A-124686

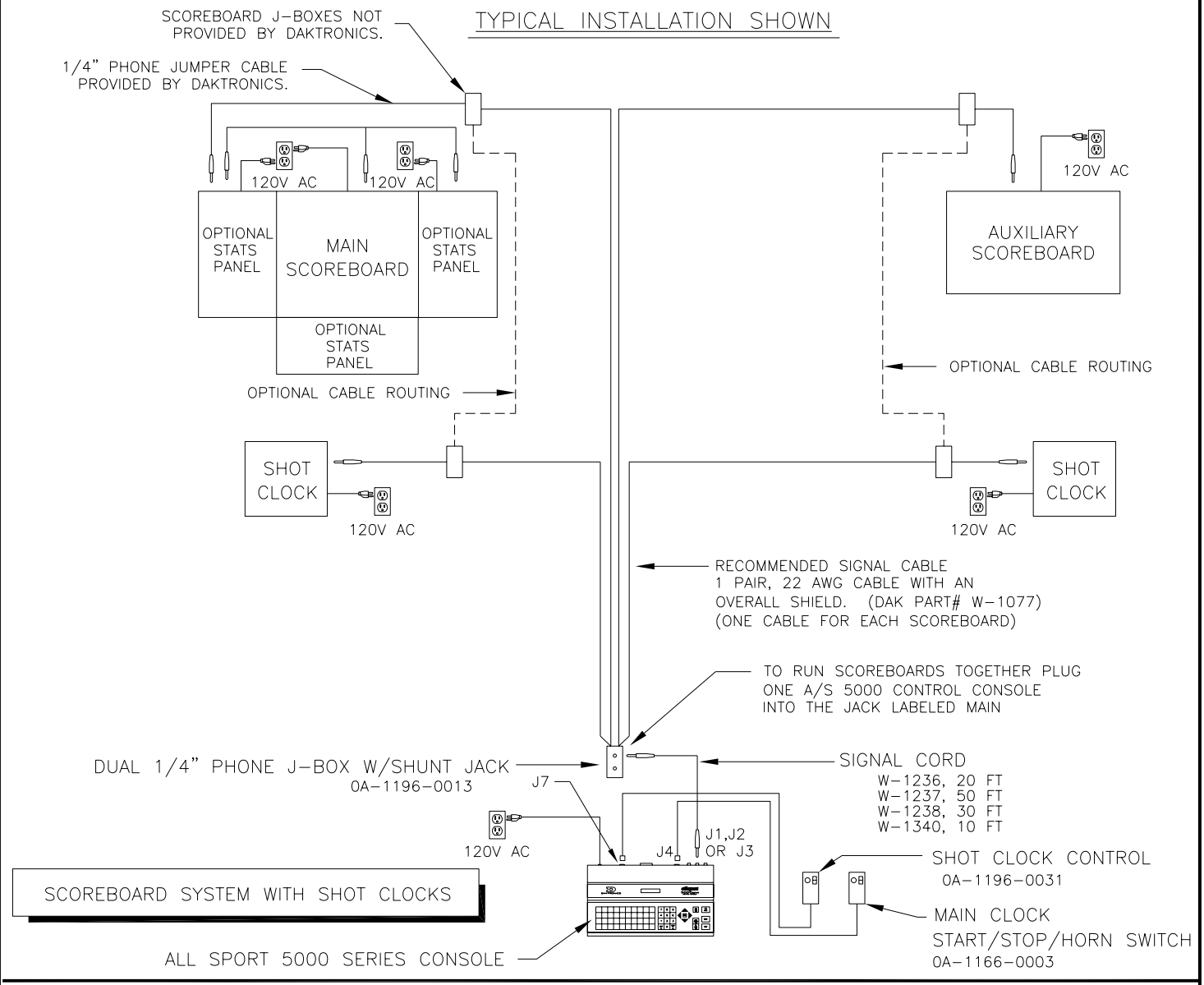

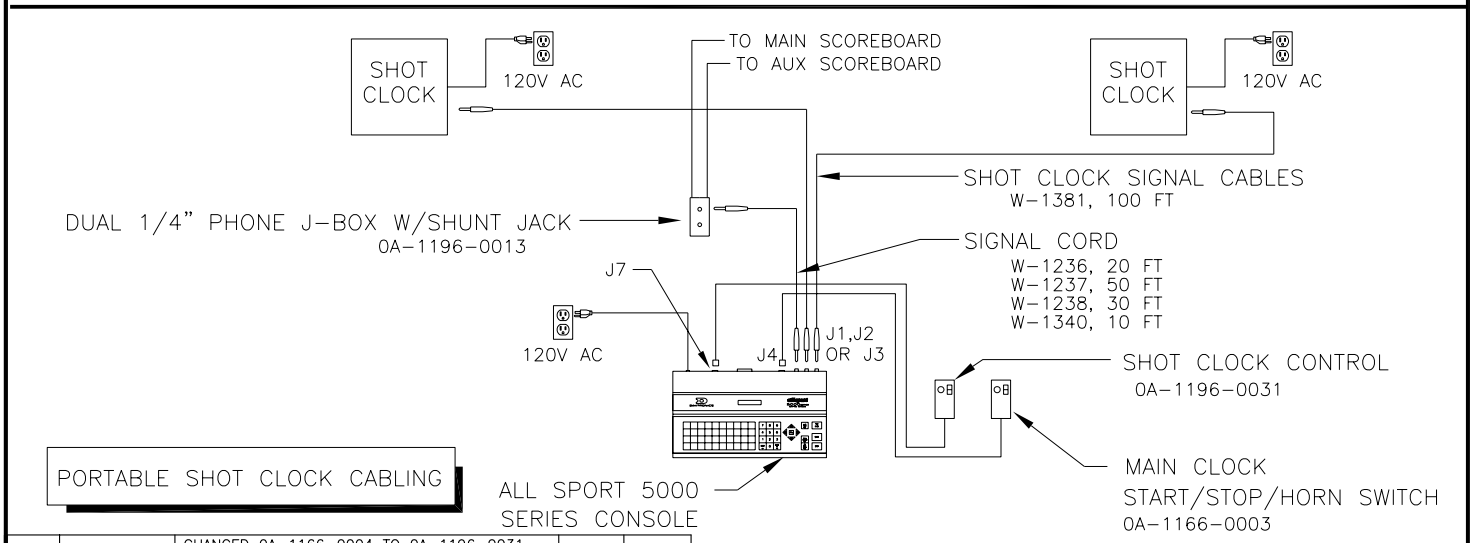

REV.	DATE	DESCRIPTION	BY	APPR.
4	17 JAN 02	CHANGED 0A-1166-0004 TO 0A-1196-0031	JJS	
3	06 SEP 01	ADDED BOTTOM OPTIONAL STATS PANEL TO MAIN BOARD, AND ADDED SIGNAL CABLES TO AND FROM OPTIONAL STATS PANELS.	NW	
2	14 DEC 00	ADDED 120VAC TO SIDE BOARDS OF MAIN SCOREBOARD	NSW	
1	29 DEC 99	ADDED SHOT CLOCK REMOTE START/STOP TO TOP A/S5000 CONTROLLER	EB	

DAKTRONICS, INC. BROOKINGS, SD 57006

PROJ: ALL SPORT 5000

TITLE: BLOCK DIAGRAMS, A/S5000 BB, VB & WR #3

DES. BY: DRAWN BY: E BRAVEK DATE: 29 NOV 99

REVISION APPR. BY:

SCALE: NONE

1196-R04A-124688

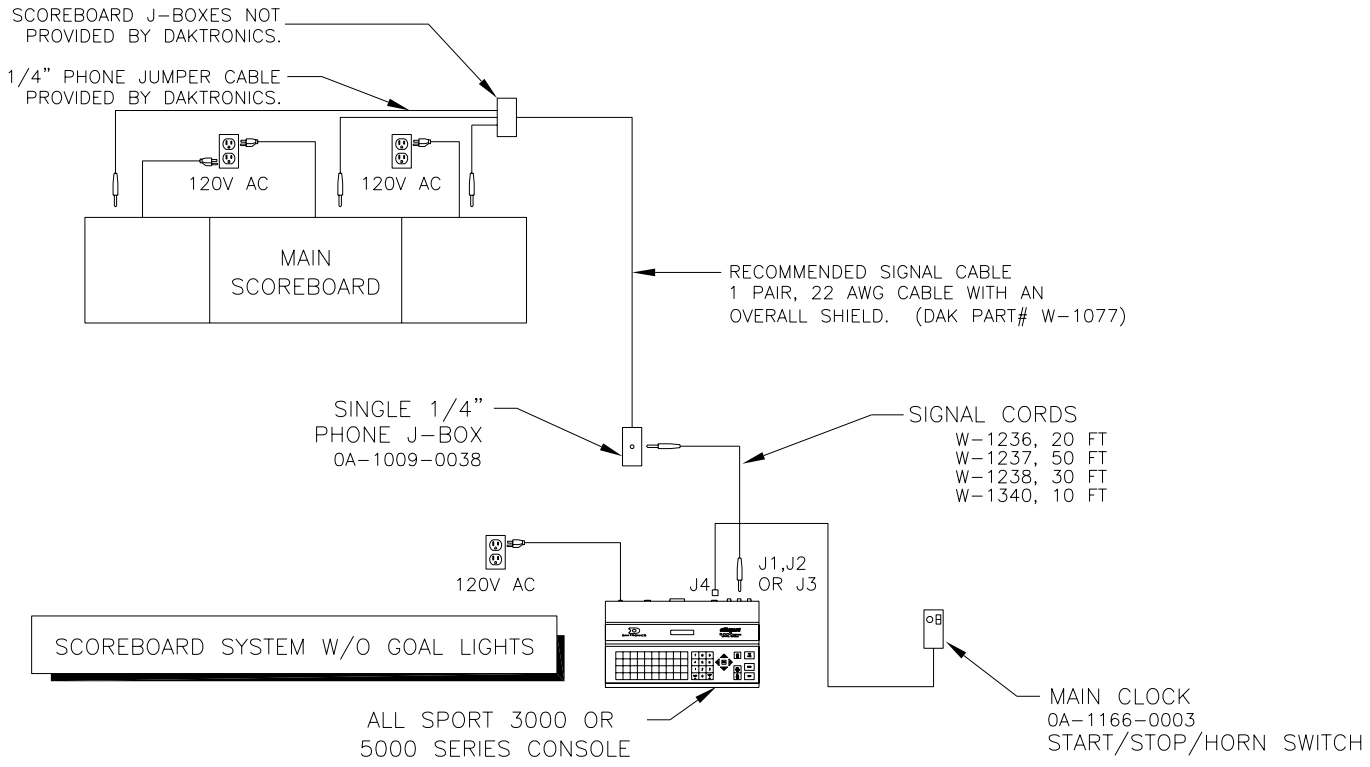

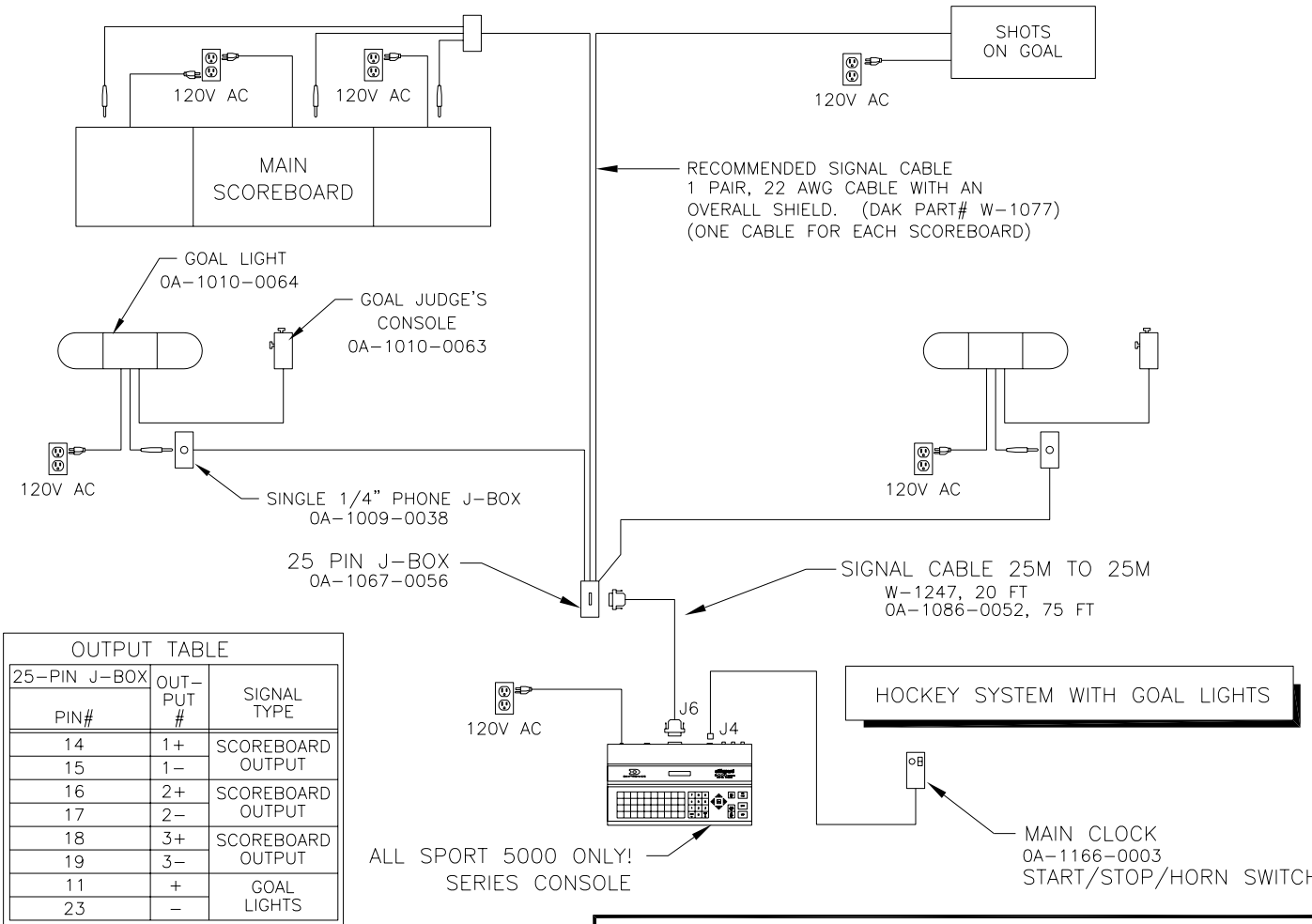

OUTPUT TABLE

25-PIN J-BOX PIN#	OUTPUT #	SIGNAL TYPE
14	1+	SCOREBOARD OUTPUT
15	1-	
16	2+	SCOREBOARD OUTPUT
17	2-	
18	3+	SCOREBOARD OUTPUT
19	3-	
11	+	GOAL LIGHTS
23	-	

REV.	DATE	DESCRIPTION	BY	APPR.
01	26 APR 00	ADDED A/S 3000	DKD	

DAKTRONICS, INC. BROOKINGS, SD 57006

PROJ: ALL SPORT 5000

TITLE: BLOCK DIAGRAM, A/S 3000 OR 5000 HOCKEY

DES. BY: DRAWN BY: E BRAVEK DATE: 29 NOV 99

REVISION APPR. BY:

SCALE: NONE

1196-R04A-124689

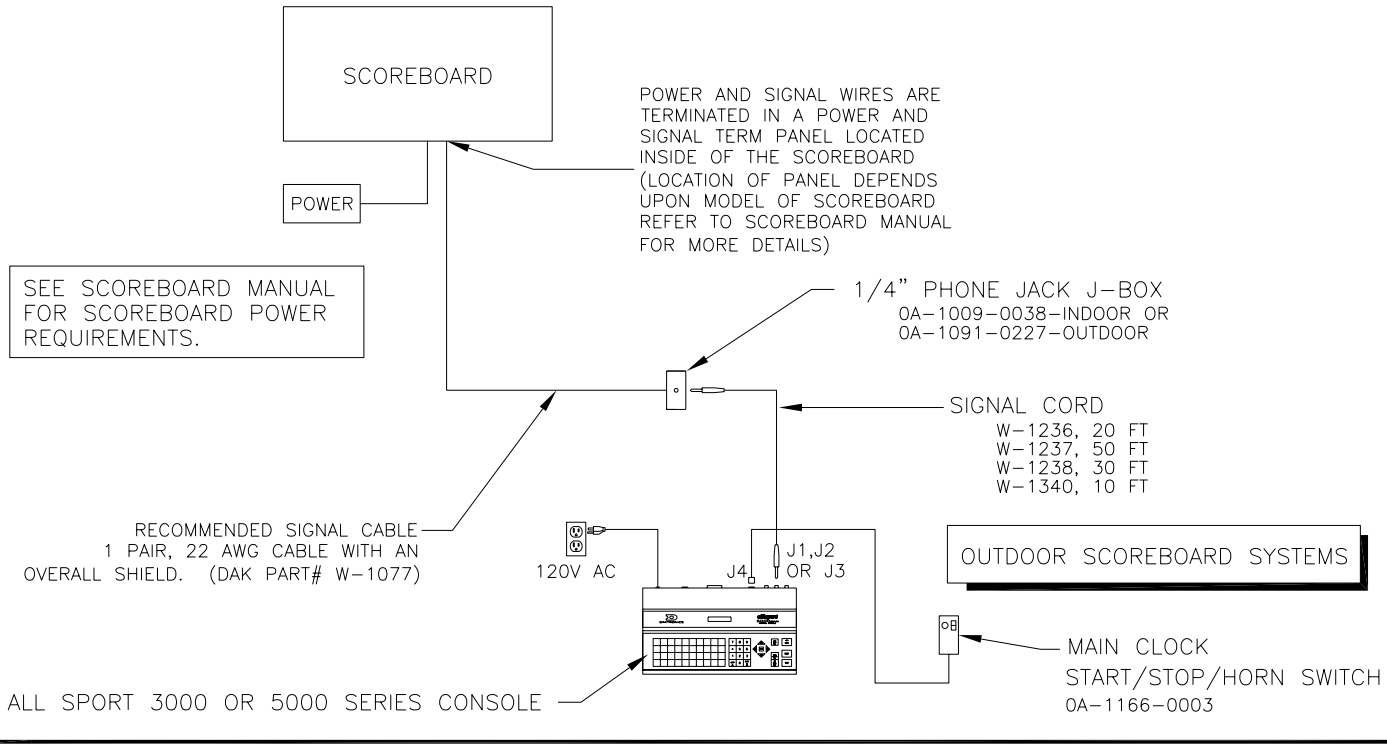

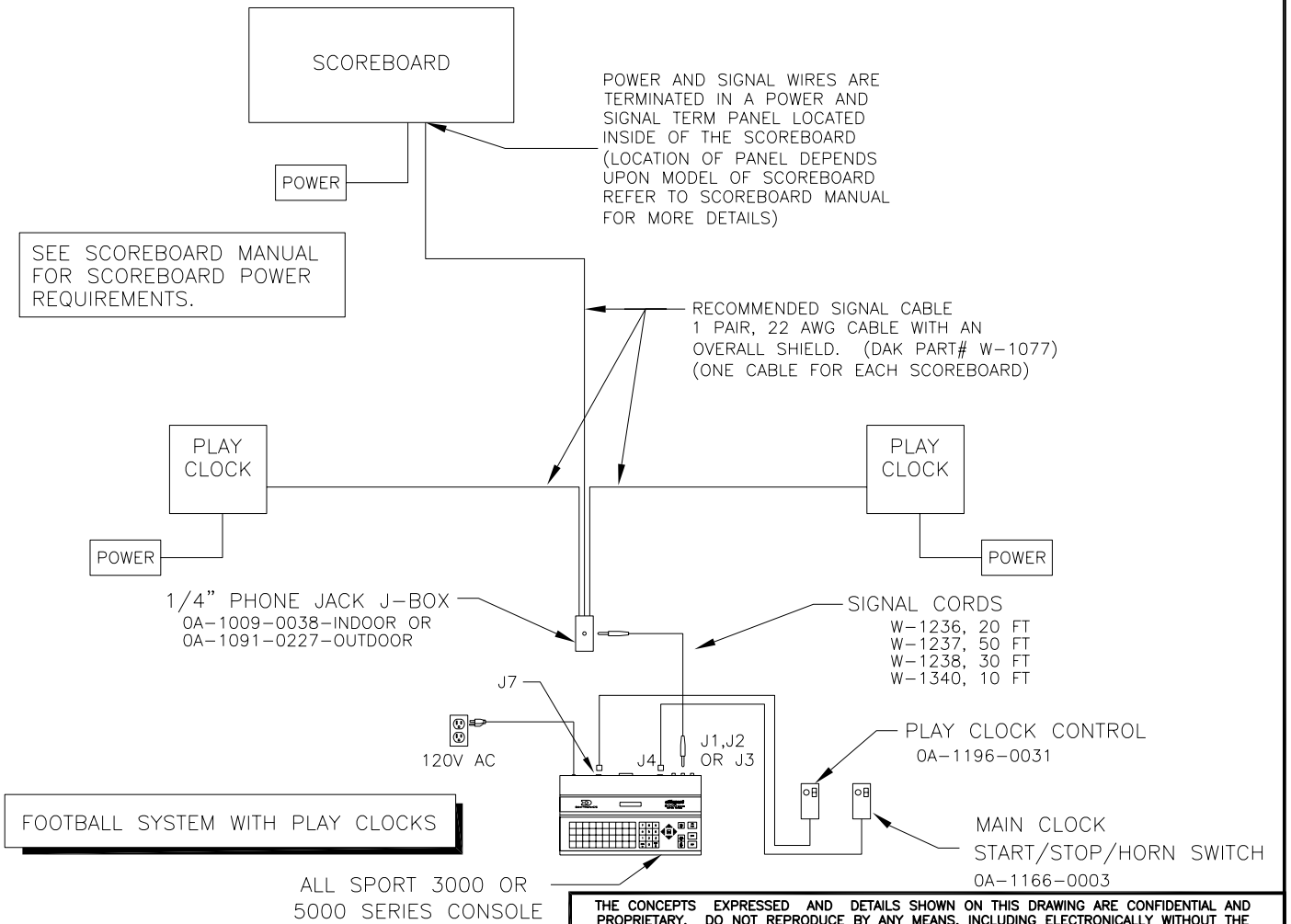

THE CONCEPTS EXPRESSED AND DETAILS SHOWN ON THIS DRAWING ARE CONFIDENTIAL AND PROPRIETARY. DO NOT REPRODUCE BY ANY MEANS, INCLUDING ELECTRONICALLY WITHOUT THE EXPRESSED WRITTEN CONSENT OF DAKTRONICS, INC. COPYRIGHT 2003 DAKTRONICS, INC.

REV.	DATE	DESCRIPTION	BY	APPR.
03	17 JAN 02	CHANGED 0A-1166-4 TO 0A-1196-31	JJS	
02	11 MAY 00	CHANGED TO REPRESENT ALL OUTDOOR SPORTS	EB	
01	26 APR 00	ADDED A/S 3000	DKD	

DAKTRONICS, INC. BROOKINGS, SD 57006

PROJ: ALL SPORT 5000

TITLE: BLOCK DIAGRAMS, A/S 3000 OR 5000 OUTDOOR SPORTS

DES. BY: DRAWN BY: E BRAVEK DATE: 30 NOV 99

REVISION 03 | APPR. BY: | SCALE: NONE

1196-R04A-124690

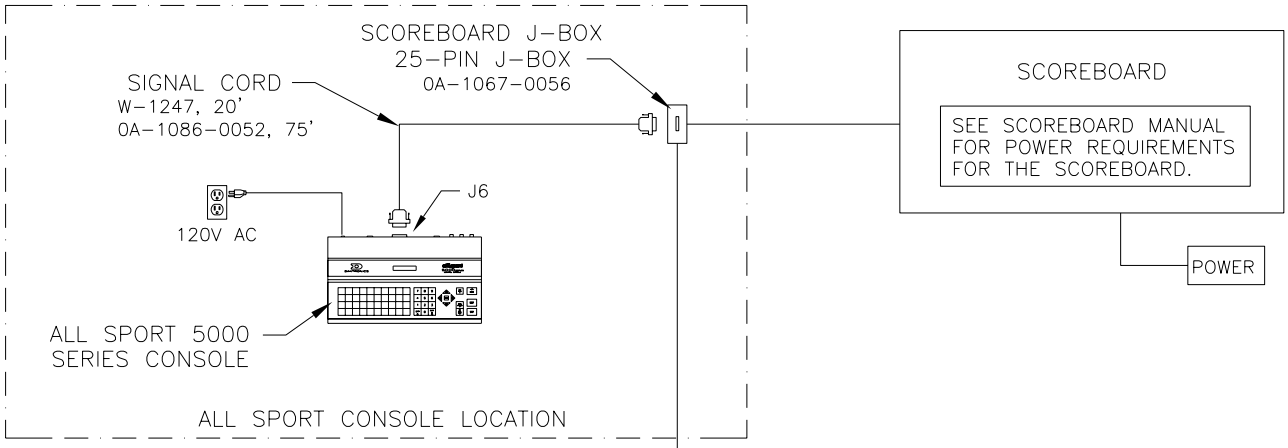

OUTPUTS TO SCOREBOARD

25-PIN J-BOX PIN#	OUT-PUT #	SIGNAL TYPE
14	1+	SCOREBOARD OUTPUT
15	1-	
16	2+	SCOREBOARD OUTPUT
17	2-	
18	3+	SCOREBOARD OUTPUT
19	3-	

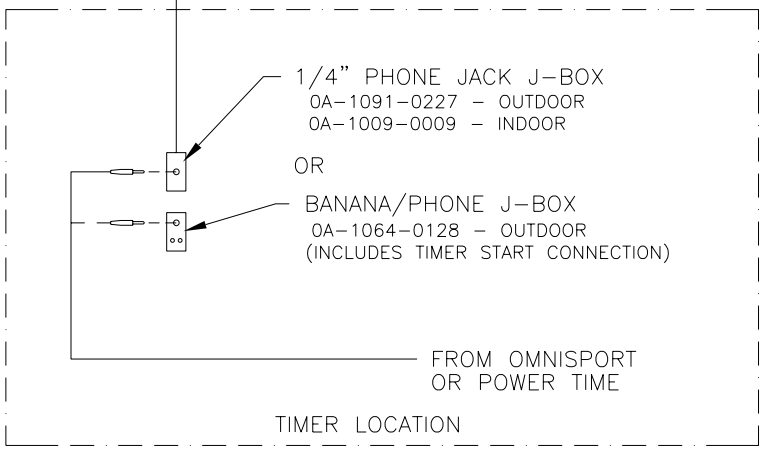

2-WIRE CONNECTION BETWEEN J-BOXES BRINGS TIMER DATA FROM TIMER TO ALLSPORT CONSOLE.

SCOREBOARD J-BOX PIN#	TIMER J-BOX WIRE COLOR
9	RED
10	BLACK

USE THIS SETUP IF THE OMNI SPORT AND ALL SPORT CONSOLE ARE TO BE AT SEPARATE LOCATIONS

FOR OMNISPORT 1000 CONNECTIONS REFER TO ED-5954.

FOR OMNISPORT 6000 CONNECTIONS REFER TO ED-8724.

FOR POWER TIME CONNECTIONS REFER TO ED-11269

USE THIS SETUP IF THE TIMER AND ALL SPORT CONSOLE ARE LOCATED TOGETHER.

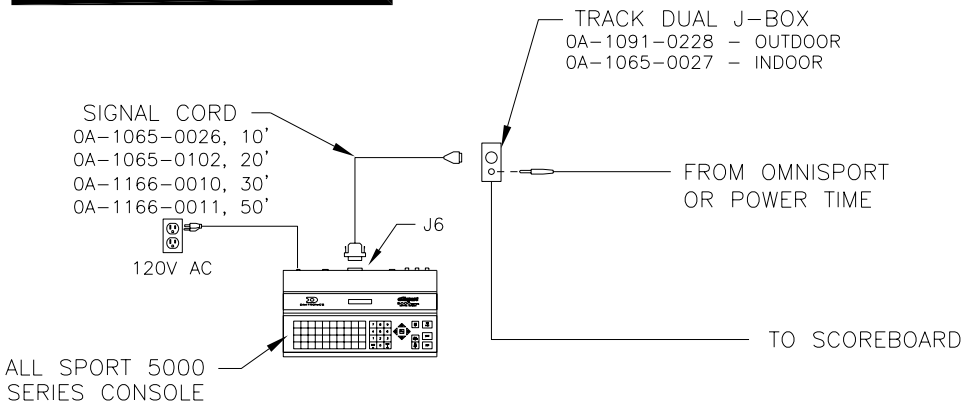

OUTPUTS TO SCOREBOARD

16-PIN J-BOX PIN#	WIRE COLOR	OUT-PUT #	SIGNAL TYPE
1	RED	1+	SCOREBOARD OUTPUT
2	BLACK	1-	
3	WHITE	2+	SCOREBOARD OUTPUT
4	GREEN	2-	
5	ORANGE	3+	SCOREBOARD OUTPUT
6	BLUE	3-	

REV.	DATE	DESCRIPTION	BY	APPR.
1	6 MAR 01	ADDED TEXT CONCERNING THE POWER TIME	NW	

DAKTRONICS, INC. BROOKINGS, SD 57006

PROJ: ALL SPORT 5000

TITLE: A/S5000 TRACK W/OMNISPORT TIMER

DES. BY: DRAWN BY: E BRAVEK DATE: 06 DEC 99

REVISION APPR. BY:

SCALE: NONE

1196-R04A-125039

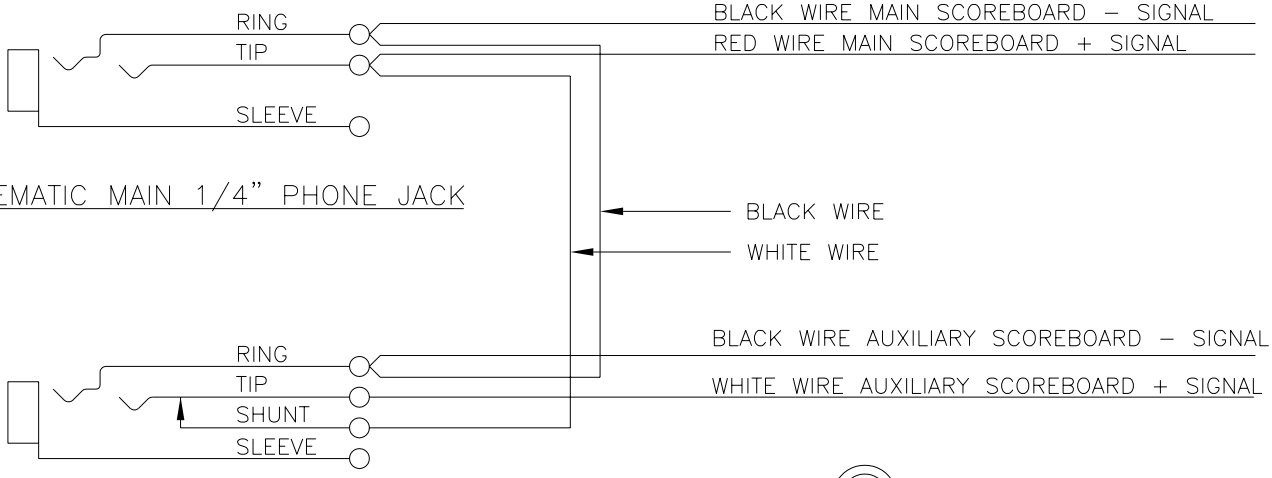

SCHEMATIC MAIN 1/4" PHONE JACK

SCHEMATIC AUXILIARY 1/4" PHONE JACK

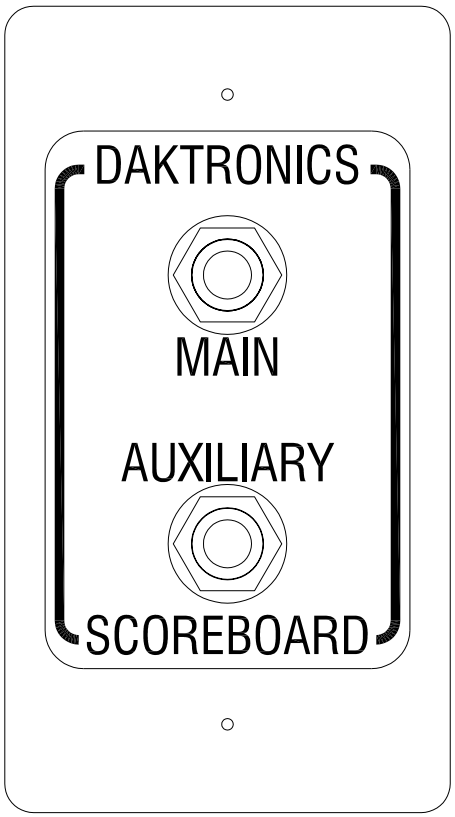

0A–1196–0013

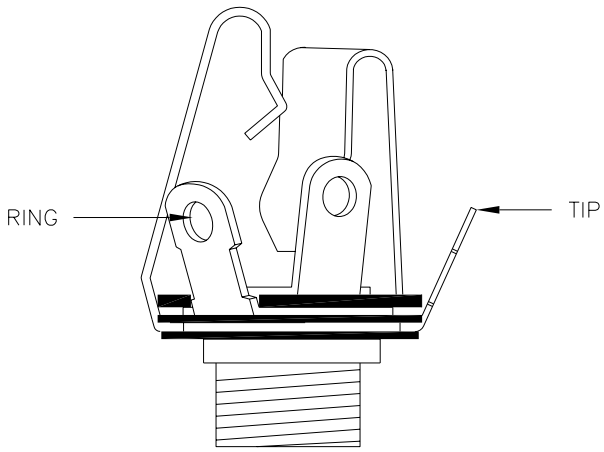

MAIN
PHONE JACK
J–1003

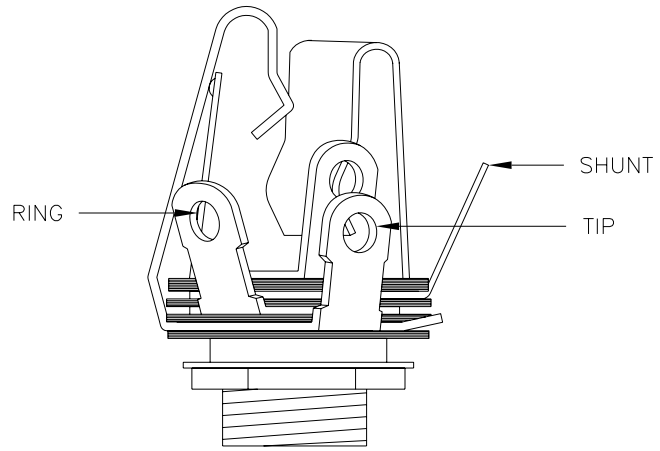

AUXILIARY
PHONE JACK
J–1131

REV.	DATE	DESCRIPTION	BY	APPR.

DAKTRONICS, INC. BROOKINGS, SD 57006

PROJ:

TITLE: SCHEMATIC; DUAL 1/4" PHONE J–BOX W/SHUNT JACK

DES. BY: E BRAVEK DRAWN BY: E BRAVEK DATE: 15 DEC 99

REVISION 00 | APPR. BY: | SCALE: NONE

1196-R03A-125316

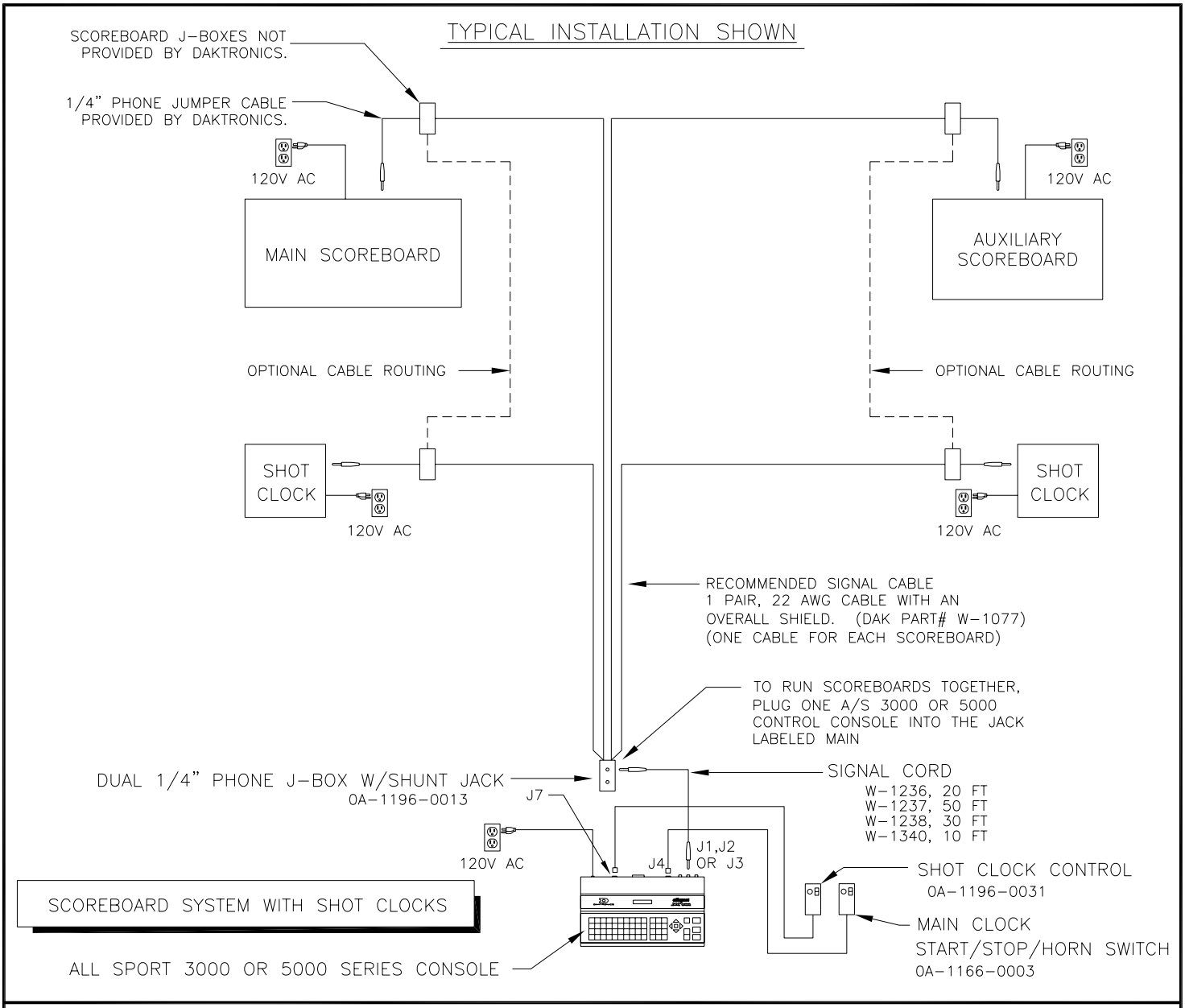

0A-1196-0013 J-BOX

TYPICAL 0A-1196-0013 J-BOX WIRING

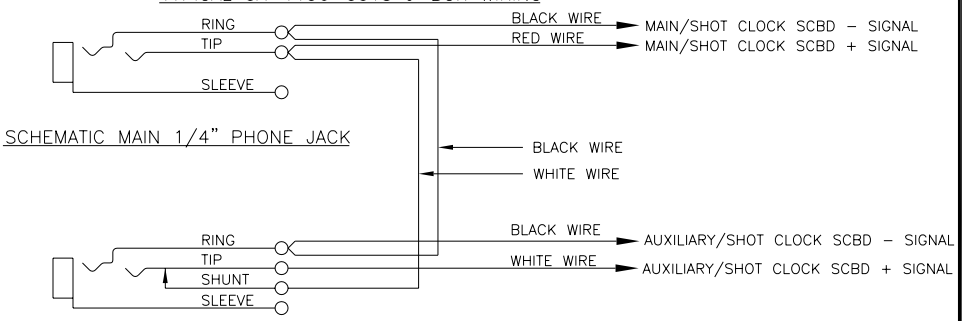

REV.	DATE	DESCRIPTION	BY	APPR.
3	17 JAN 02	CHANGED 0A-1166-4 TO 0A-1196-31	JJS	
02	26 APR 00	ADDED A/S 3000	DKD	
1	29 DEC 99	ADDED SHOT CLOCK REMOTE START STOP TO A/S 5000 CONTROLLER	EB	

DAKTRONICS, INC. BROOKINGS, SD 57006

PROJ: ALL SPORT 5000

TITLE: BLOCK DIAGRAM, A/S 3000 OR 5000 BB, VB & WR #2

DES. BY: DRAWN BY: E BRAVEK DATE: 15 DEC 99

REVISION 03 | APPR. BY: | SCALE: NONE

1196-R04A-125415

STRIP 1/4" OF INSULATION OFF OF EACH WIRE.

INSERT WIRE IN THE CORRECT POSTION.

USING A SMALL FLAT HEAD SCREW DRIVER TIGHTEN THE TERMINAL BLOCK TILL WIRE IS HELD IN PLACE. MAKE SURE TO NOT HAVE ANY EXCESS UNINSULATED WIRE STICKING OUT OF TERMINAL. BLOCK POSITION

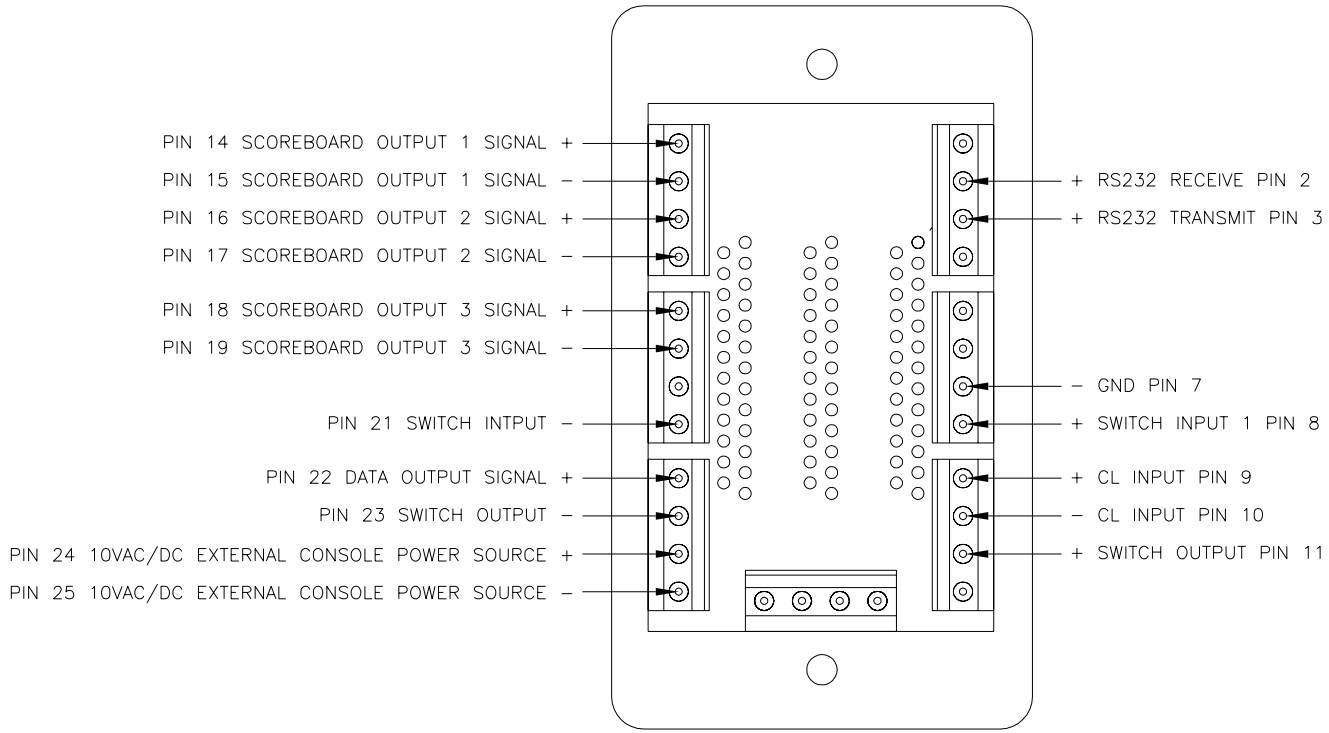

REAR VIEW OF J–BOX
FACEPLATE

REV.	DATE	DESCRIPTION	BY	APPR.

DAKTRONICS, INC. BROOKINGS, SD 57006

PROJ:

TITLE: ALL SPORT 5000, 25PIN PCB J–BOX WIRING

DES. BY: EBRAVEK DRAWN BY: EBRAVEK DATE: 15 DEC 99

REVISION APPR. BY:

SCALE: 1=3

1196-R01A-125416

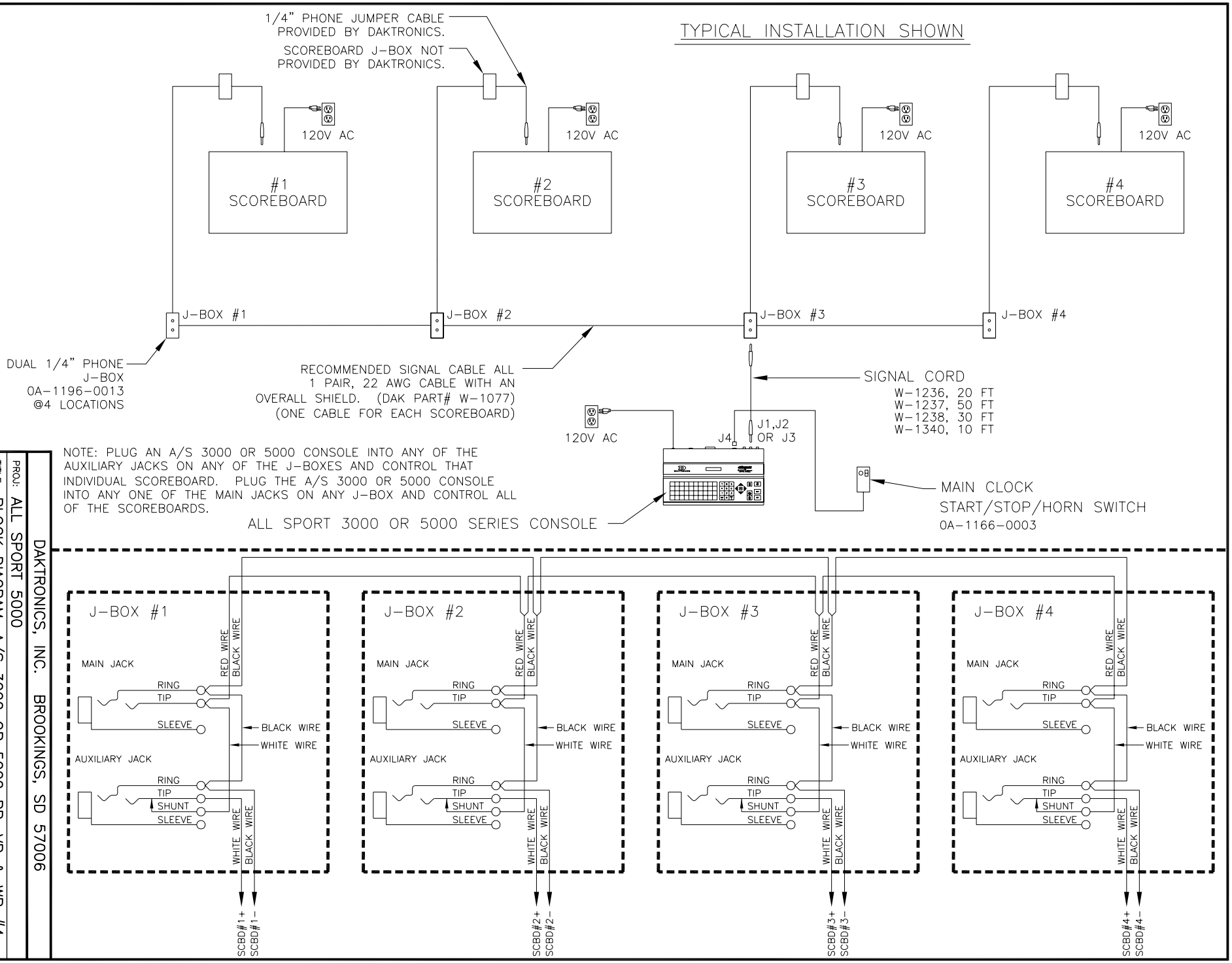

REV.	DATE	DESCRIPTION	BY	APPR.
01	26 APR 00	ADDED A/S 3000	DKD	

REVISION

DAKTRONICS, INC. BROOKINGS, SD 57006

PROJ: ALL SPORT 5000

TITLE: BLOCK DIAGRAM; A/S 3000 OR 5000 BB, VB & WR #4

DES. BY: EBRAVEK DRAWN BY: EBRAVEK DATE: 24 JAN 00

APPR. BY:

SCALE: NONE

1196-R01A-12541 7

SCOREBOARD WITH RADIO SET TO J5 = BCAST1, CHANNEL #1

SCOREBOARD #1

ONE CONSOLE WITH RADIO SET TO BCAST = 1 CHANNEL 01 CONTROLLING ONE SCOREBOARD ONLY

MOST BASIC SETUP: ONE SCOREBOARD AND ONE CONTROLLER AT ALL TIMES.

SCOREBOARD RADIO RECEIVER WILL COME FACTORY SET CORRECTLY; J5 = BCAST1, CHANNEL = 1 (S1 = 1).

SET CONTROL CONSOLE TO BCAST = 1, CHANNEL = 01.

IF SCOREBOARD FAILS TO OPERATE OPEN SCOREBARD RADIO RECEIVER AND VERIFY THAT J5 = BCAST1 AND CHANNEL = 1 (S1 = 1).

SCOREBOARD WITH RADIO SET TO J5 = BCAST1, CHANNEL #1

SCOREBOARD #1

SCOREBOARD WITH RADIO SET TO J5 = BCAST1, CHANNEL #1

SCOREBOARD #2

ONE CONSOLE WITH RADIO SET TO BCAST = 1 CHANNEL 01 CONTROLLING ALL SCOREBOARDS AT ONCE

BASIC SETUP: MULTIPLE SCOREBOARDS WITH ONE CONTROLLER AT ALL TIMES.

SCOREBOARD RADIO RECEIVERS WILL COME FACTORY SET CORRECTLY; J5 = BCAST1, CHANNEL = 1 (S1 = 1). ALL SCOREBOARD RADIO RECEIVERS SHOULD BE SET THE SAME.

SET CONTROL CONSOLE TO BCAST = 1, CHANNEL = 01.

IF ANY SCOREBOARD FAILS TO OPERATE PROPERLY OPEN SCOREBARD RADIO RECEIVER IN FAULTY SCOREBOARD(S) AND VERIFY THAT J5 = BCAST1, AND CHANNEL = 1 (S1 = 1).

REV.	DATE	DESCRIPTION	BY	APPR.
00				

THE CONCEPTS EXPRESSED AND DETAILS SHOWN ON THIS DRAWING ARE CONFIDENTIAL AND PROPRIETARY, DO NOT REPRODUCE BY ANY MEANS, INCLUDING ELECTRONICALLY WITHOUT THE EXPRESSED WRITTEN CONSENT OF DAKTRONICS, INC. COPYRIGHT 2002 DAKTRONICS, INC.

DAKTRONICS, INC. BROOKINGS, SD 57006

PROJ:

TITLE: CHANNEL SELECTION; SINGLE CONTROL CONSOLE, GEN IV

DES. BY: CBRECZI DRAWN BY: CBRECZI DATE: 06 JAN 03

APPR. BY:

SCALE: 1=1

REVISION

1110-R01A-180566

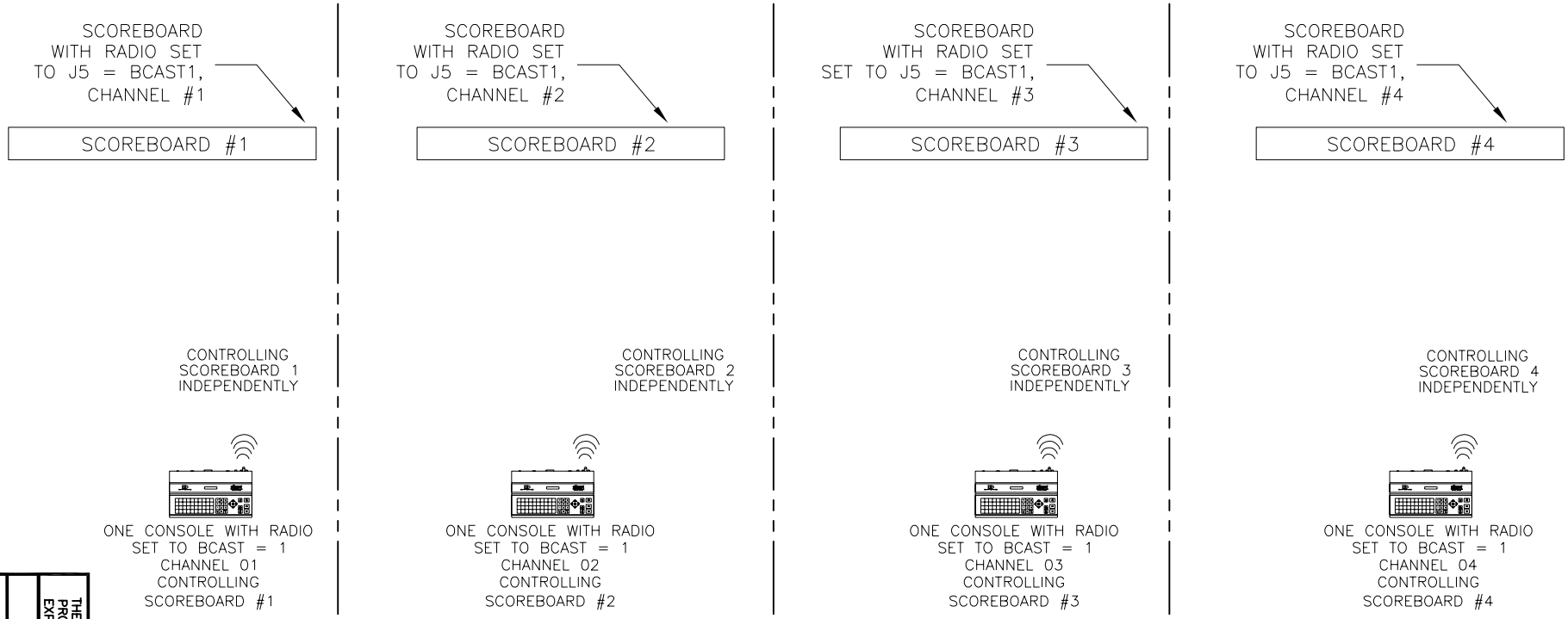

INTERMEDIATE SETUP: MULTIPLE SCOREBOARDS EACH RUN INDEPENDENTLY OR ALL RUN FROM ONE CONTROLLER.

EACH SCOREBOARD RADIO RECEIVER WILL NEED TO BE SETUP:
SCOREBOARD #1; J5 = BCAST1, CHANNEL = 1 (S1 = 1).
SCOREBOARD #2; J5 = BCAST1, CHANNEL = 2 (S1 = 2).
SCOREBOARD #3; J5 = BCAST1, CHANNEL = 3 (S1 = 3)
UP TO 8 SCOREBOARDS CAN BE SETUP IN THIS METHOD; S1 ON THE SCOREBOARD RADIO RECEIVER CAN BE SET TO 1 THRU 8.

FOR INDIVIDUAL CONTROL SET THE CONTROL CONSOLE TO BCAST = 1, AND THE CHANNEL TO THE CHANNEL NUMBER OF THE SCOREBOARD YOU WOULD LIKE TO CONTROL. EX. TO CONTROL JUST SCOREBOARD #3 SET THE CONSOLE TO BCAST = 1, CHANNEL = 03.

FOR CONTROL OF ALL SCOREBOARDS AT ONCE SET THE CONTROL CONSOLE TO BCAST = 0, CHANNEL = 00.

REV.	DATE	DESCRIPTION	BY	APPR.
00				

THE CONCEPTS EXPRESSED AND DETAILS SHOWN ON THIS DRAWING ARE CONFIDENTIAL AND PROPRIETARY. DO NOT REPRODUCE BY ANY MEANS, INCLUDING ELECTRONICALLY WITHOUT THE EXPRESSED WRITTEN CONSENT OF DAKTRONICS, INC.
COPYRIGHT 2002 DAKTRONICS, INC.

DAKTRONICS, INC. BROOKINGS, SD 57006

PROJ:

TITLE: CHANNEL SELECTION; SINGLE BROADCAST GROUP, GEN IV

DES. BY: CBRECZI DRAWN BY: CBRECZI DATE: 06 JAN 03

APPR. BY:

SCALE: 1=1

1110-R01A-180922

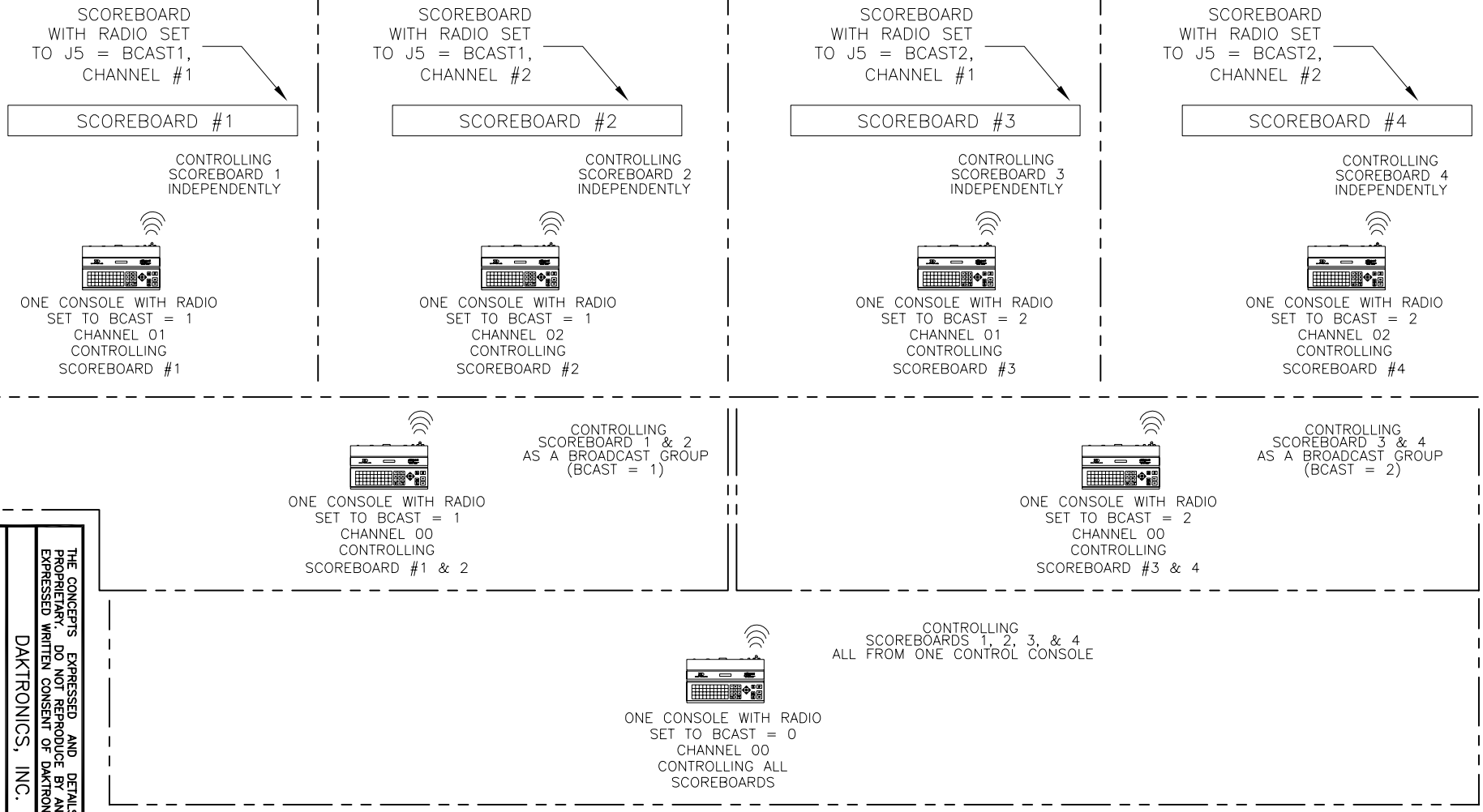

ADVANCED SETUP: MULTIPLE SCOREBOARDS EACH RUN INDEPENDENTLY, OR SPLIT INTO GROUPS, OR ALL RUN FROM ONE CONTROLLER.

A TYPICAL SCENARIO FOR THIS SETUP IS A BASKETBALL COURT THAT CAN BE RUN IN FULL COURT, HALF COURT, OR QUARTER COURT SETUP. THE INFORMATION BELOW WILL APPLY TO ANY SPORT OR SET OF SCOREBOARDS THAT NEED TO HAVE MULTIPLE CONTROL OPTIONS.

EACH SCOREBOARD RADIO RECEIVER WILL NEED TO BE SETUP; YOU CAN HAVE UP TO 4 CHANNELS IN EACH BCAST GROUP; CHANNEL 1 THRU 4. REFER TO DRAWING 1110-R01A-180514 OR 1110-R01A-180521 FOR CHANNEL SETTING INSTRUCTIONS.

FOR ALL SCOREBOARDS IN ONE GROUP, SET J5 = BCAST1. THEN SET THE CHANNEL # OF EACH SCOREBOARD TO A DIFFERENT CHANNEL NUMBER FROM 1 THRU 4. THIS WILL BE BROADCAST GROUP 1 (BCAST = 1).

FOR ALL SCOREBOARD IN THE OTHER GROUP SET J5 = BCAST2. THEN SET THE CHANNEL # OF EACH SCOREBOARD TO A DIFFERENT CHANNEL NUMBER FROM 1 UP TO 4. THIS WILL BE BROADCAST GROUP 2 (BCAST = 2).

TO RUN ALL SCOREBOARDS AT ONCE; SET THE CONTROL CONSOLE TO BCAST = 0, CHANNEL = 00.

TO RUN ALL SCOREBOARDS IN BROADCAST GROUP 1 AT ONCE SET THE CONTROL CONSOLE TO BCAST = 1, CHANNEL = 00
TO RUN ALL SCOREBOARD IN BROADCAST GROUP 2 AT ONCE SET THE CONTROL CONSOLE TO BCAST = 2, CHANNEL = 00

TO RUN EACH SCOREBOARD INDEPENDENTLY SET THE CONTROL CONSOLE TO THE APPROPRIATE BROADCAST GROUP (BCAST = 1 OR 2), AND THEN SET THE CHANNEL TO THE SCOREBOARD CHANNEL. EX. TO RUN SCOREBOARD #3 IN THE SETUP ILLUSTRATED ABOVE, SET THE CONTROL CONSOLE TO BCAST = 2, CHANNEL = 01.

REV.	DATE	DESCRIPTION	BY	APPR.
00		REVISION		

SCALE: 1=1
APPR. BY:
DRAWN BY: CBRECZI DATE: 06 JAN 03
DES. BY: CBRECZI
TITLE: CHANNEL SELECTION; MULTIPLE BROADCAST GROUP, GEN IV
PROJ:

1110-R01A-180923

DAKTRONICS, INC. BROOKINGS, SD 57006

THE CONCEPTS EXPRESSED AND DETAILS SHOWN ON THIS DRAWING ARE CONFIDENTIAL AND PROPRIETARY. DO NOT REPRODUCE BY ANY MEANS, INCLUDING ELECTRONICALLY WITHOUT THE EXPRESSED WRITTEN CONSENT OF DAKTRONICS, INC.
COPYRIGHT 2002 DAKTRONICS, INC.

THIS IS A STEP BY STEP EXPLANATION USING GEOMETRY TO CALCULATE THE "SPEED ADJUST" VALUE IN THE MENU OF THE ALL SPORT PITCH AND SPEED PROGRAM, CODE 5500.

A CALCULATOR WITH ABILITY TO DO SIN, COS, TAN IS REQUIRED.
DO ALL CALCULATIONS TO .XXXX VALUES.

STEP 1.
MEASURE, IN FEET, DISTANCE FROM PITCHER'S MOUND STRAIGHT BACK, PAST HOME PLATE TO THE AREA WHERE GUN IS. WRITE YOUR MEASUREMENT ON THE _____ PROVIDED ON THE TRIANGLE PICTURE BELOW.

STEP 2.
MEASURE, IN FEET, HOW HIGH THE GUN IS OFF THE GROUND. WRITE YOUR MEASUREMENT ON THE _____ PROVIDED ON THE TRIANGLE PICTURE BELOW.

STEP 3.
CALCULATE THE "LENGTH #1" VALUE. USE
LENGTH #1 = $\sqrt{D^2 + H^2}$

STEP 4.
CALCULATE THE "ANGLE #1" VALUE. USE
ANGLE #1 = COS^{-1}(D/LENGTH #1)

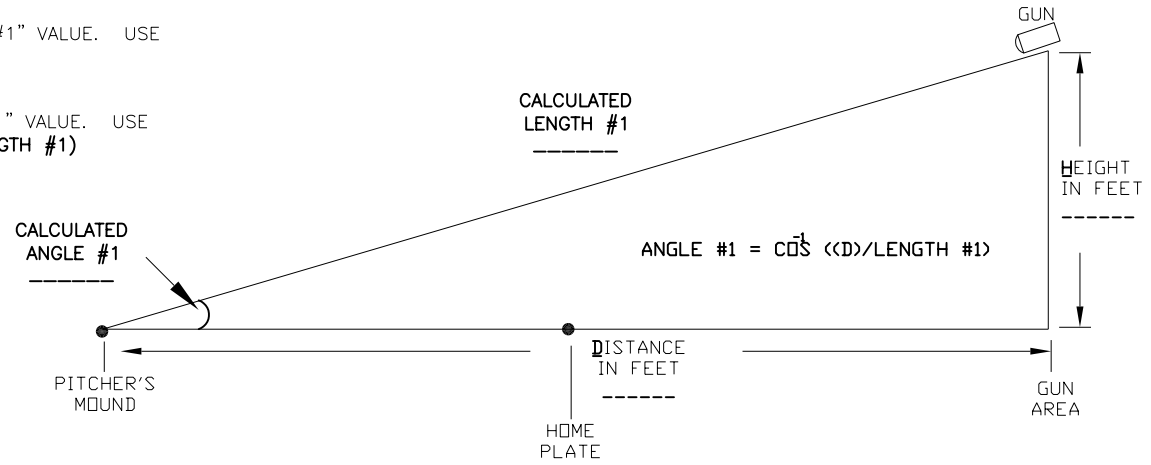

STEP 5.
MEASURE, IN FEET, HOW FAR OVER THE GUN IS "OFFSET" FROM HOME PLATE. WRITE YOUR MEASUREMENT ON THE _____ PROVIDED ON THE TRIANGLE PICTURE BELOW.

STEP 6.
COPY THE "LENGTH #1" VALUE WHICH FOUND ABOVE, TO THIS PICTURE. YOU WILL REUSE THAT NUMBER.

STEP 7.
CALCULATE THE "ANGLE #2" VALUE. USE
ANGLE #2 = TAN^{-1}(O/LENGTH #1)

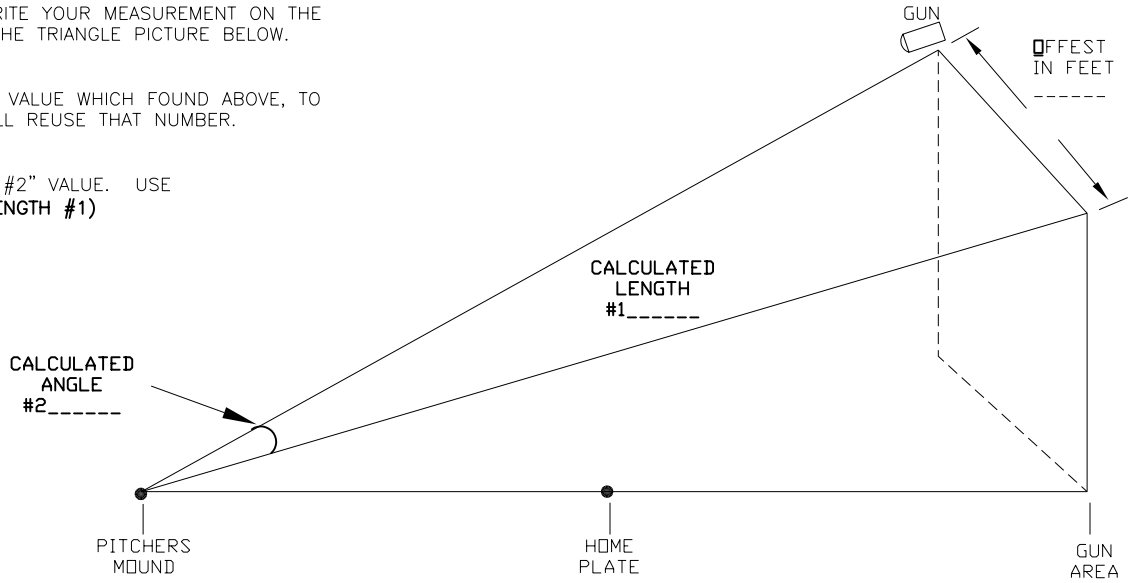

STEP 8.
ADD CALCULATED ANGLE #1 TO CALCULATED ANGLE #2.
ENTER VALUE HERE _____

STEP 7.
CALCULATE SPEED ADJUST VALUE. USE
SPEED ADJUST VALUE = COS(ANGLE #1 + ANGLE #2).

CALCULATIONS SHOWN WILL NOT BE 100% EXACT. ADDITIONAL ADJUSTMENTS CAN BE MADE AS REQUIRED. *** THE LOWER THE NUMBER, THE FASTER SPEED THE GUN READS. ALL ADJUSTMENTS SHOULD BE DONE AT .00XX LEVEL. ***

THE CONCEPTS EXPRESSED AND DETAILS SHOWN ON THIS DRAWING ARE CONFIDENTIAL AND PROPRIETARY. DO NOT REPRODUCE BY ANY MEANS, INCLUDING ELECTRONICALLY WITHOUT THE EXPRESSED WRITTEN CONSENT OF DAKTRONICS, INC. COPYRIGHT 2005 DAKTRONICS, INC.

DAKTRONICS, INC. BROOKINGS, SD 57006

PROJ:

TITLE: SPEED ADJUST CALCULATIONS, RADAR GUN

DES. BY: DRAWN BY: AHOWARD DATE: 31 MAY 05

REVISION 01 | APPR. BY: | SCALE: NONE

1196-R08A-243741

REV.	DATE	DESCRIPTION	BY	APPR.
01	18 JUL 05	UPDATED ANGLE # 1 MODIFIED TEXT	CMG	

Appendix B: Sport Inserts

Sport Insert Drawings:

Insert; Event Counter Codes 371-376 ..... **Drawing A-058047**
Insert; Tae Kwan Do, Code 283 ..... **Drawing A-096889**
Insert; Karate Code 282 ..... **Drawing A-096890**
Insert; Judo Code 281 ..... **Drawing A-096891**
Insert; Boxing, Code 291 ..... **Drawing A-096892**
Custom Insert, Karate Code 285 ..... **Drawing A-098374**
Custom Insert, Karate Code 286 ..... **Drawing A-098375**
Custom Insert, Judo Code 284 ..... **Drawing A-098376**
Insert, Basketball, LL-2433 ..... **Drawing A-120121**
Insert, A/S 5000, Football ..... **Drawing A-122652**
Insert, LL-2436, Hockey/Handball/Lacrosse ..... **Drawing A-124218**
Insert; A/S 5000, Wrestling ..... **Drawing A-124701**
Insert; Volleyball ..... **Drawing A-125055**
Insert; A/S 5000, Baseball ..... **Drawing A-125061**
Insert; A/S 5000, Track ..... **Drawing A-125094**
Insert; A/S 5000, Soccer ..... **Drawing A-125215**
Insert, Team Name ..... **Drawing A-125290**
Insert; A/S 5000, Segment Timer ..... **Drawing A-129357**
Insert; A/S 5000, Pitch & Speed ..... **Drawing A-130895**
Insert; A/S 5000, Tennis ..... **Drawing A-131274**
Insert; A/S 5000, Smart Clock Codes 1000 & 6000 ..... **Drawing A-136301**
Insert; A/S 5000, Strikeout ..... **Drawing A-163409**
Insert; Cricket ..... **Drawing A-164973**
Insert; A/S 5000, Water Polo ..... **Drawing A-178439**

EVENT COUNTER

CODE	FUNCTION
371	DAY AND TIME (VENUS 1500)
372	DAY AND TIME (STANDARD RTD)
373	TIME BASED (VENUS 1500)
374	TIME BASED (STANDARD RTD)
375	EXTERNAL INPUT (VENUS 1500)
376	EXTERNAL INPUT (STANDARD RTD)
377	CUSTOM

OG-58047 REV. 2

REV.	DATE	DESCRIPTION	BY	APPR.
2	29 JUL 99	CHANGED PART NUMBER FROM LL-2369 TO OG-58047.	AVB	AVB
1	26 OCT 98	ADDED CODE 377	DDL	

REVISION

DAKTRONICS, INC. BROOKINGS, SD 57006

PROJ:

TITLE: INSERT, EVENT COUNTER CODES 371-376

DES. BY: AVB DRAWN BY: A VANBEMMEL DATE: 18 FEB 98

APPR. BY:

SCALE: 1=1

1166-R08A-58047

TAE KWON DO
CODE 283

00-96889 REV 1

REV.	DATE	DESCRIPTION	BY	APPR.
01	01 JUL 99	CHANGED PART NUMBER TO 0G-96889	AVB	AVB

REVISION

DAKTRONICS, INC. BROOKINGS, SD 57006

PROJ:
TITLE: INSERT, TAE KWON DO CODE 283
DES. BY: AVB DRAWN BY: A VANBEMMEL DATE: 26 SEP 97
APPR. BY:
SCALE: 1=1

1166-R08A-96889

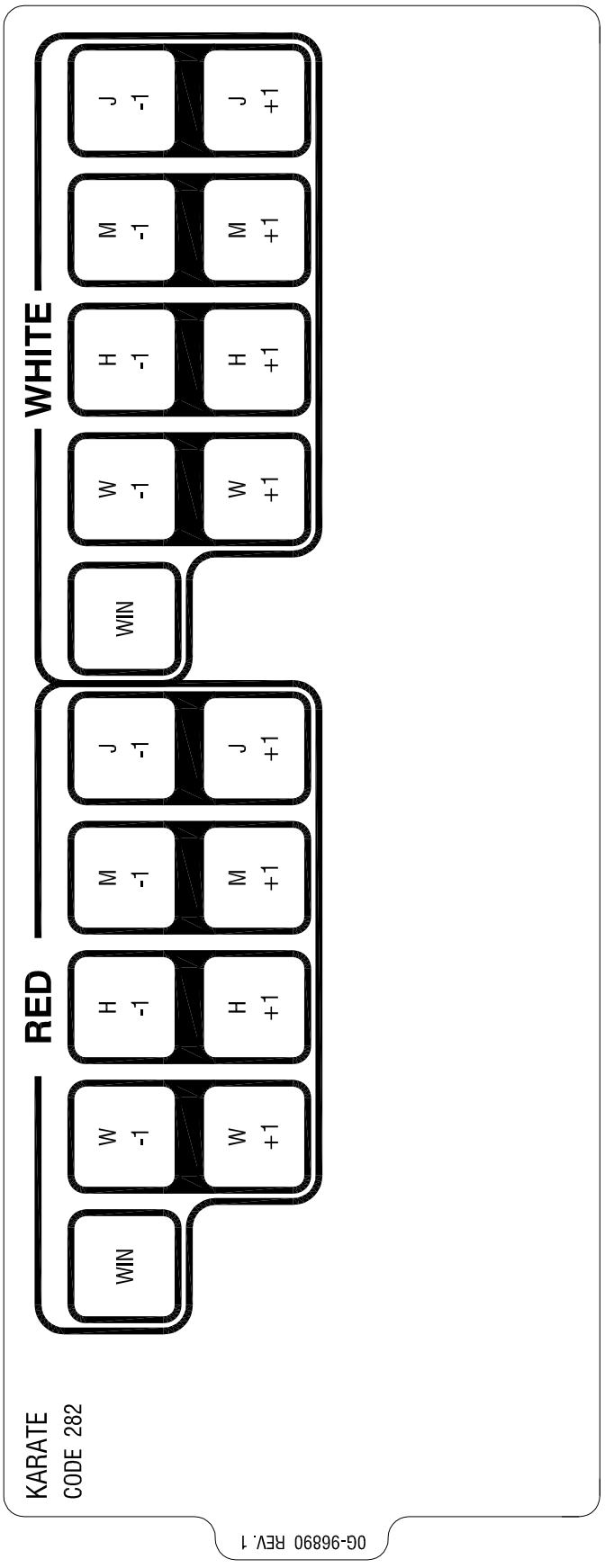

REV.	DATE	DESCRIPTION	BY	APPR.
1	19 JUN 00	CHANGED PART NUMBER TO FROM LL-2345 TO 0G-96890.	AVB	AVB

DAKTRONICS, INC. BROOKINGS, SD 57006

PROJ:

TITLE: INSERT, KARATE CODE 282

DES. BY: AVB DRAWN BY: A VANBEMMEL DATE: 26 SEP 97

REVISION APPR. BY:

SCALE: 1=1

1166-R08A-96890

JUDO

CODE 281

OG-96891 REV. 1

REV.	DESCRIPTION	BY	APPR.
1	CHG TEXT "RED" TO "BLUE" CHG PART NO. FROM LL-2346 TO OG-96891	AVB	AVB

DATE
21 SEP 99

DAKTRONICS, INC. BROOKINGS, SD 57006

PROJ:

TITLE: INSERT, JUDO CODE 281

DES. BY: AVB DRAWN BY: A VANBEMMEL DATE: 26 SEP 97

REVISION APPR. BY:

SCALE: 1=1

1166-R08A-96891

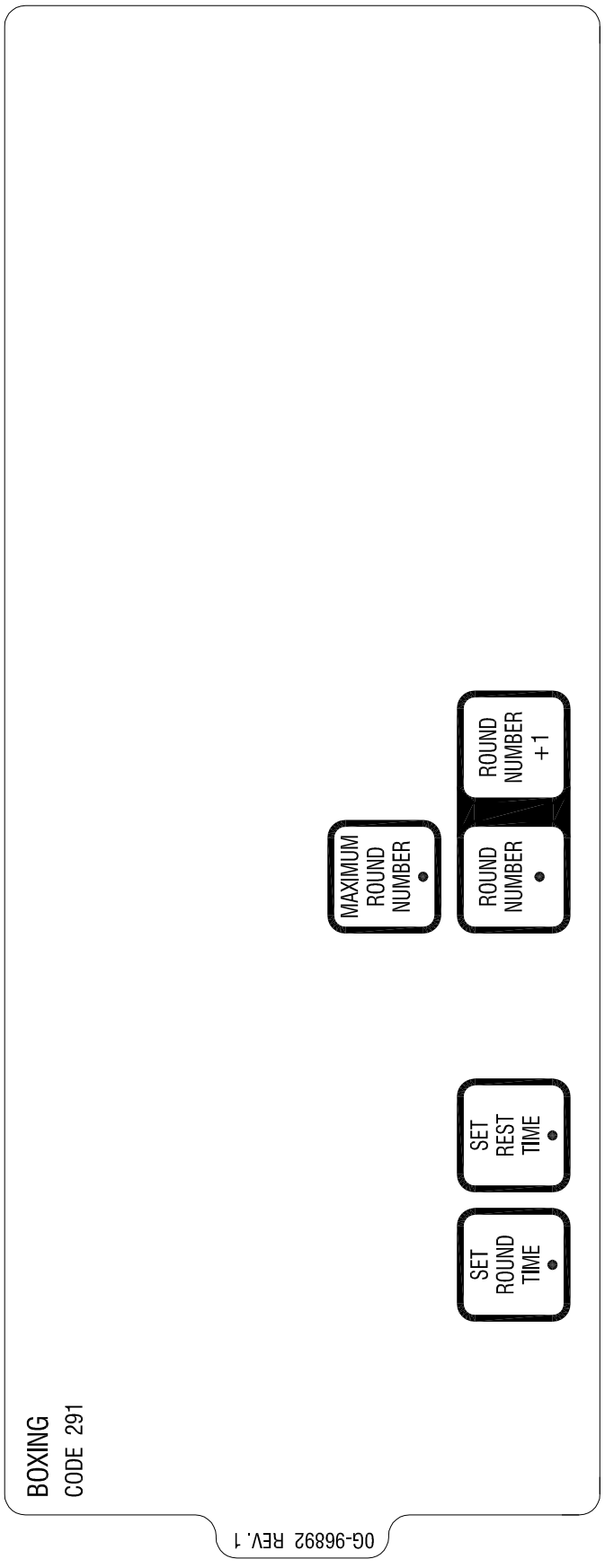

REV.	DATE	DESCRIPTION	BY	APPR.
1	11 APR 01	CHANGED PART NUMBER FROM LL-2347 TO 0G-96892	AVB	

DAKTRONICS, INC. BROOKINGS, SD 57006

PROJ:

TITLE: INSERT, BOXING CODE 291

DES. BY: AVB DRAWN BY: A VANBEMMEL DATE: 26 SEP 97

REVISION APPR. BY:

SCALE: 1=1

1166-R08A-96892

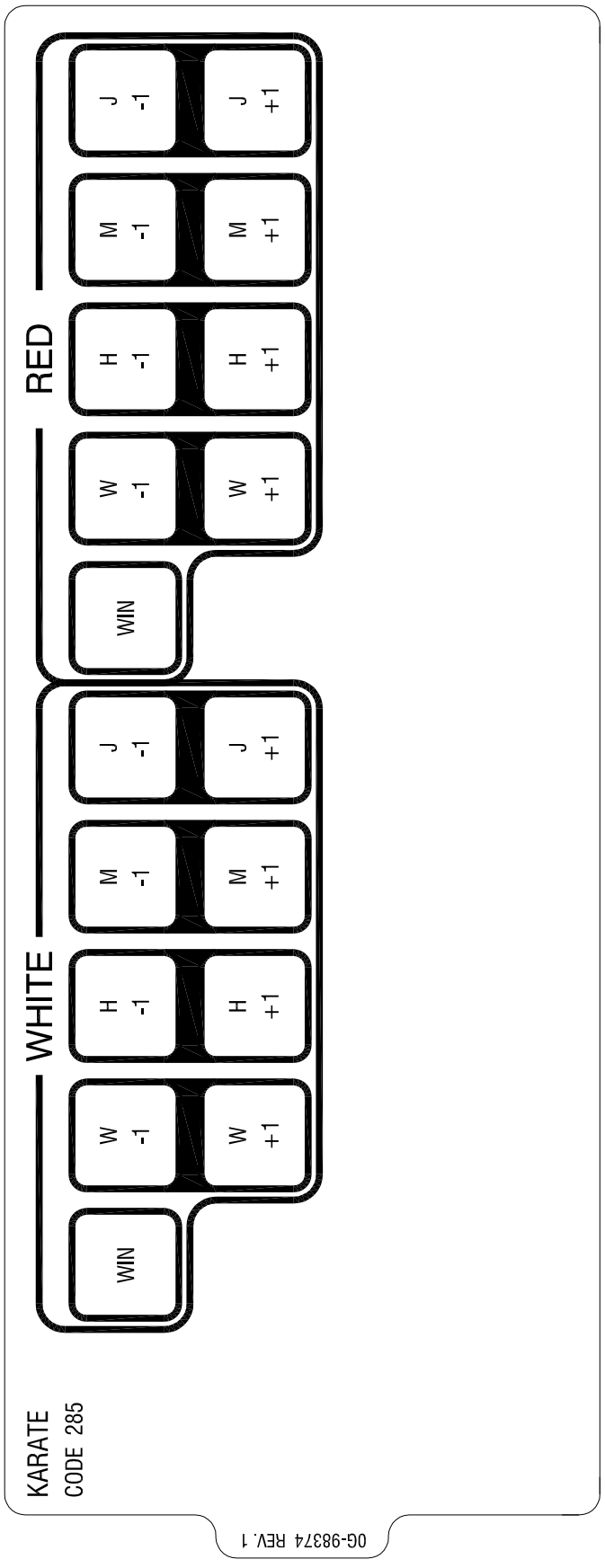

REV.	DATE	DESCRIPTION	BY	APPR.
1	19 JUN 00	CHANGED PART NUMBER TO 0G-98374	AVB	AVB

DAKTRONICS, INC. BROOKINGS, SD 57006

PROJ:

TITLE: CUSTOM INSERT, KARATE CODE 285

DES. BY: AVB DRAWN BY: D DELEEUW DATE: 11 NOV 97

REVISION APPR. BY:

SCALE: 1=1

1166-R08A-98374

TAE KWON DO
CODE 286

WHITE

✓	K -1	G -1	D -1
WIN	K +1	G +1	D +1

TOTAL ON/OFF

WEIGHT CLASS

RED

✓	K -1	G -1	D -1
WIN	K +1	G +1	D +1

ROUND LENGTH •

REST LENGTH •

ROUND NO. •

0G-98375 REV. 1

REV.	DATE	DESCRIPTION	BY	APPR.
1	19 JUN 00	CHANGED PART NUMBER TO 0G-98375	AVB	

DAKTRONICS, INC. BROOKINGS, SD 57006

PROJ:
TITLE: CUSTOM INSERT, TAE KWON DO CODE 286
DES. BY: AVB DRAWN BY: D DELEEUW DATE: 11 NOV 97
APPR. BY:
SCALE: 1=1

REVISION

1166-R08A-98375

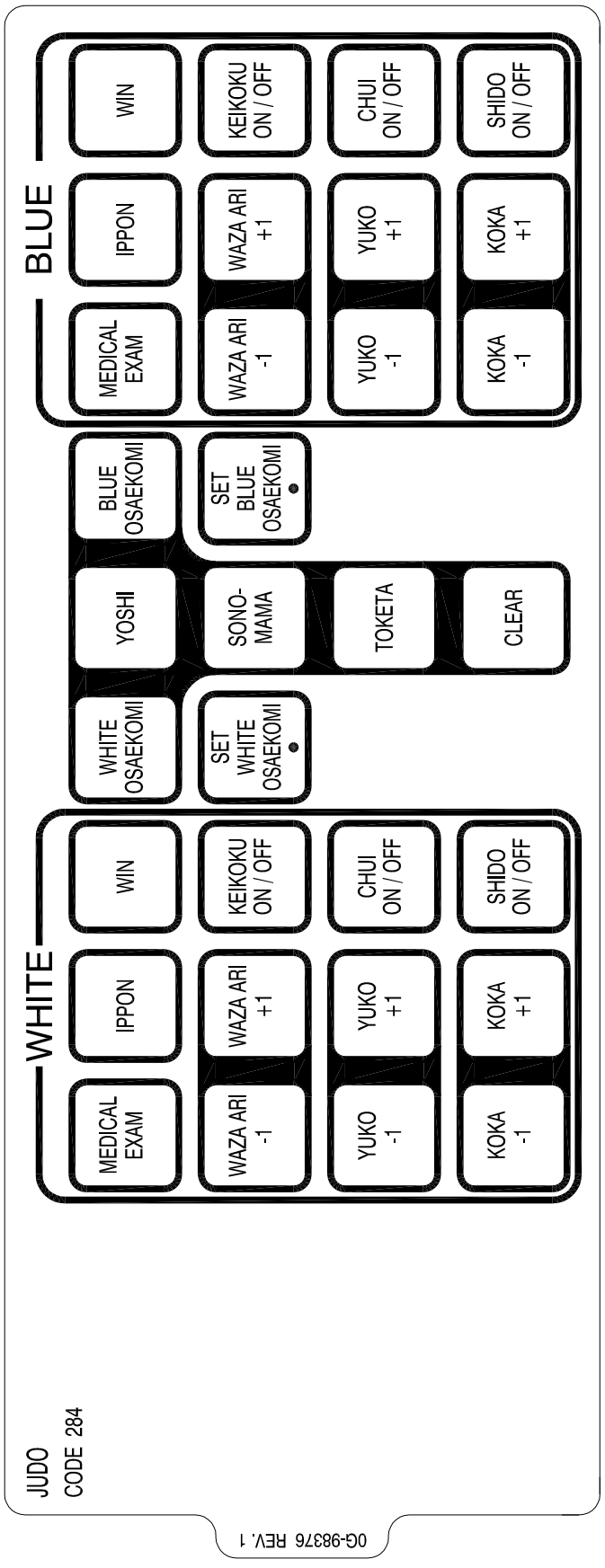

REV.	DATE	DESCRIPTION	BY	APPR.
1	16 NOV 99	CHANGED RED TO BLUE CHANGED PART NUMBER TO 0G-98376	AVB	

DAKTRONICS, INC. BROOKINGS, SD 57006

PROJ:

TITLE: CUSTOM INSERT, JUDO CODE 284

DES. BY: AVB DRAWN BY: D DELEEUW DATE: 11 NOV 97

REVISION

APPR. BY:

SCALE: 1=1

1166-R08A-98376

REV.	DATE	DESCRIPTION	BY	APPR.
07	30 MAR 04	ADDED CODE 1301 MATSIDE	RDS	
06	24 FEB 04	UPDATED REVISION TEXT TO MATCH SPEC DWG	DJU	
05	19 FEB 04	ADDED CLEAR TEAM FOULS KEY	DJU	

DAKTRONICS, INC. BROOKINGS, SD 57006

PROJ: ALL SPORT 5000 SERIES CONSOLE

TITLE: INSERT, BASKETBALL, LL-2433

DES. BY: AVB DRAWN BY: A VANBEMMEL DATE: 11 AUG 99

REVISION 07

APPR. BY:

SCALE: 1=1

1196-E07A-120121

REV.	DATE	DESCRIPTION	BY	APPR.
06	12 AUG 05	CHANGED FIRST & 10 KEY TO FIRST DOWN ADDED PENALTY FLAG KEY ADDED CODE 6612	DJU	
5	07 FEB 01	ADDED CODE 6402 FB>HK PLACED ALL CODES IN NUMERICAL ORDER	NW	
4	26 JULY 00	ADDED CODE 6105 PLYR/FL/PTS	EB	

DAKTRONICS, INC. BROOKINGS, SD 57006

PROJ: ALL SPORT 5000 SERIES CONSOLE

TITLE: INSERT; FOOTBALL

DES. BY: AVB DRAWN BY: A VANBEMMEL DATE: 07 OCT 99

REVISION 06 APPR. BY:

SCALE: 1=1

1196-E07A-122652

REV.	DATE	DESCRIPTION	BY	APPR.
9	30 MAR 04	REMOVED CODE 4101 ADDED CODE 4102	RDS	
8	6 MAY 03	ADDED BACK SIDE PRINTING OF SEGMENT TIMER. BACK SIDE PRINTED PER DRAWING A-187890	CJB	
7	24 SEP 02	ADDED CODES 4601, 4602, 4701, AND 4702	CJB	

DAKTRONICS, INC. BROOKINGS, SD 57006

PROJ: ALL SPORT 5000 SERIES CONSOLE

TITLE: INSERT; LL-2436, HOCKEY/HANDBALL/LACROSSE

DES. BY: AVB DRAWN BY: A VANBEMMEL DATE: 18 NOV 99

REVISION 09

APPR. BY:

SCALE: 1=1

1196-E07A-124218

REV.	DATE	DESCRIPTION	BY	APPR.
3	26 JULY 00	ADDED CODE 3105 PLYR/FL/PTS	EB	
2	27 DEC 99	ADDED CODE LABEL LOCATION	EB	
1	06 DEC 99	ADDED CODE NUMERS	EB	

LL-2435 REV 02

WRESTLING

CODE	TYPE
3101	PLAYER-FOUL
3102	FOUL-PLAYER
3103	SERIES 3000
3104	SERIES 2500
3105	PLYR/FL/PTS
3304	MATSIDE JR

PLACE CODE LABEL HERE

ENTER THIS CODE NUMBER

DAKTRONICS, INC. BROOKINGS, SD 57006

PROJ: ALL SPORT 5000 SERIES CONSOLE

TITLE: INSERT, WRESTLING

DES. BY: AVB DRAWN BY: A VANBEMMEL DATE: 19 NOV 99

REVISION

APPR. BY:

SCALE: 1=1

1196-E07A-124701

REV.	DATE	DESCRIPTION	BY	APPR.
3	30 MAR 04	ADDED CODE 2301 MATSIDE	RDS	
2	26 JULY 00	ADDED CODE 2105 PLYR/FL/PTS	EB	
1	27 DEC 99	ADDED CODE LABEL LOCATION	EB	

DAKTRONICS, INC. BROOKINGS, SD 57006

PROJ: ALL SPORT 5000 SERIES CONSOLE

TITLE: INSERT, VOLLEYBALL

DES. BY: EB DRAWN BY: E BRAVEK DATE: 06 DEC 99

APPR. BY:

SCALE: 1=1

REVISION 03

1196-E07A-125055

REV.	DATE	DESCRIPTION	BY	APPR.
1	27 DEC 99	ADDED CODE LABEL LOCATION	EB	

DAKTRONICS, INC. BROOKINGS, SD 57006

PROJ: ALL SPORT 5000 SERIES CONSOLE

TITLE: INSERT, BASEBALL

DES. BY: EB DRAWN BY: E BRAVEK DATE: 06 DEC 99

REVISION APPR. BY:

SCALE: 1=1

1196-E07A-125061

TRACK

CODE	TYPE
8601	MANUAL TIMING
8602	OMEGA-TIMERS
8603	OMNISPORT TIMERS
8604	HAWKEYE/FINISH LYNX RUNNING TIME RTD

HOME

HOME SCORE

SCORE +1

GUEST 1

GUEST 1 SCORE

SCORE +1

RESET

PLACE

LANE

GUEST 2

GUEST 2 SCORE (EVENT)

SCORE +1

GUEST 3

GUEST 3 SCORE (HEAT)

SCORE +1

PLACE CODE LABEL HERE

ENTER THIS CODE NUMBER

LL-2439

REV.	DATE	DESCRIPTION	BY	APPR.

REVISION

DAKTRONICS, INC. BROOKINGS, SD 57006

PROJ: ALL SPORT 5000

TITLE: INSERT; TRACK

DES. BY: EB DRAWN BY: E BRAVEK DATE: 2 MAR 2000

APPR. BY:

SCALE: 1=1

1196-E07A-125094

REV.	DATE	DESCRIPTION	BY	APPR.
4	19 FEB 02	ADDED FOULS BOTTONS	JJS	
3	26 JULY 00	ADDED CODE 7711	EB	
2	14 MAR 00	ADDED CODE 7604	EB	

REVISION

DAKTRONICS, INC. BROOKINGS, SD 57006

PROJ: ALL SPORT 5000 SERIES CONSOLE

TITLE: INSERT, SOCCER

DES. BY: EB DRAWN BY: E BRAVEK DATE: 09 DEC 99

APPR. BY:

SCALE: 1=1

1196-E07A-125215

REV.	DATE	DESCRIPTION	BY	APPR.

DAKTRONICS, INC. BROOKINGS, SD 57006

PROJ: ALL SPORT 5000 SERIES CONSOLE

TITLE: INSERT; TEAM NAME

DES. BY: EB DRAWN BY: E BRAVEK DATE: 13 DEC 99

REVISION APPR. BY:

SCALE: 1=1

1196-E07A-125290

REV.	DATE	DESCRIPTION	BY	APPR.
1	26 JULY 99	ADDED CODE 100 DEDICATED SEGMENT TIMER	EB	

SEGMENT TIMER

ACCESS THROUGH MENU
FROM WITHIN SPORT CODE

PRESS [MENU]

PRESS ▽ UNTIL

DISPLAY MENU?

PRESS [ENTER YES]

SEGMENT TIMER Y/N

PRESS [ENTER YES]

DEDICATED SEGMENT TIMER

CODE 100

LL-2475 REV 01

DAKTRONICS, INC. BROOKINGS, SD 57006

PROJ: ALL SPORT 5000 SERIES CONSOLE

TITLE: INSERT, SEGMENT TIMER

DES. BY: EB DRAWN BY: E BRAVEK DATE: 21 MAR 00

REVISION

APPR. BY:

SCALE: 1=1

1196-E07A-129357

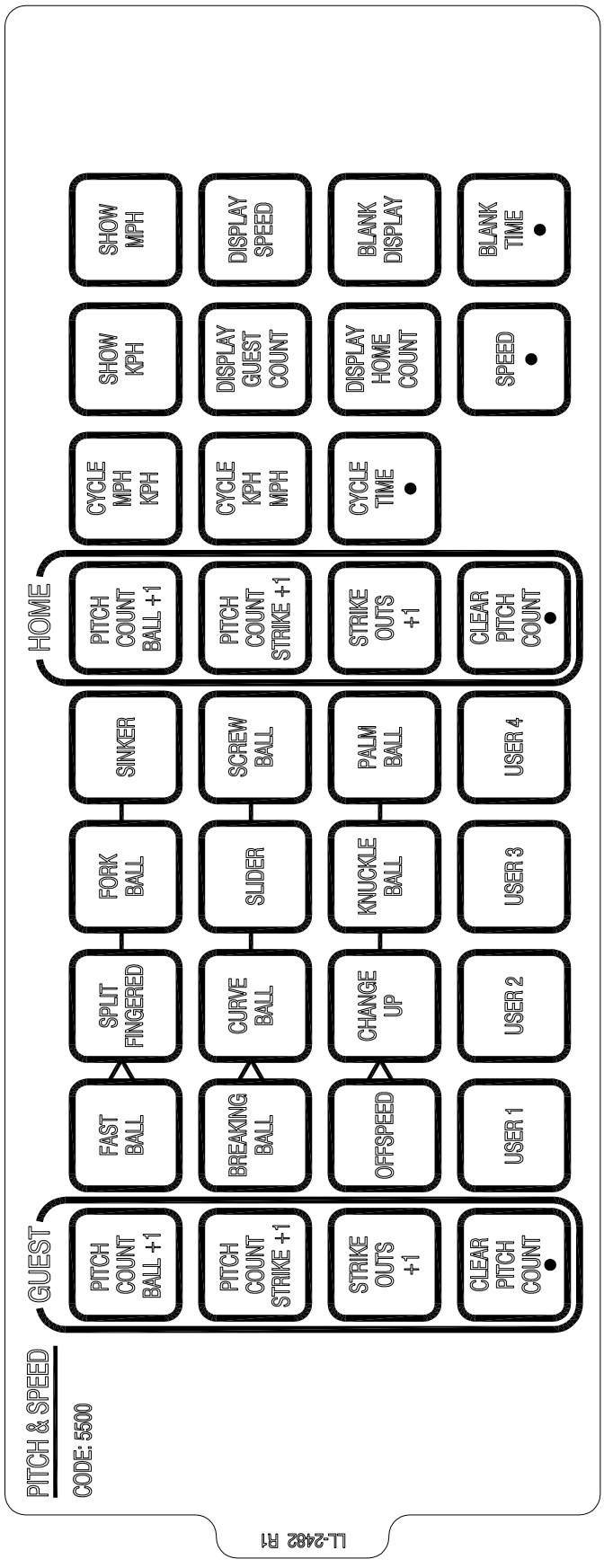

REV.	DATE	DESCRIPTION	BY	APPR.
2	20 JUN 01	SWITCHED POSITION OF THE GUEST AND HOME COLUMNS TO MATCH SOFTWARE	NW	
1	31 MAY 01	ADDED HOME AND GUEST COLUMNS WITH FOUR NEW KEYS, AND ALSO ADDED "DISPLAY GUEST COUNT" AND "DISPLAY HOME COUNT" KEYS.	NSW	

DAKTRONICS, INC. BROOKINGS, SD 57006

PROJ:

TITLE: INSERT, A/S 5000, PITCH AND SPEED

DES. BY: EB DRAWN BY: EBRAVEK DATE: 13 APR 00

REVISION APPR. BY:

SCALE: 1=1

1196-E07A-130895

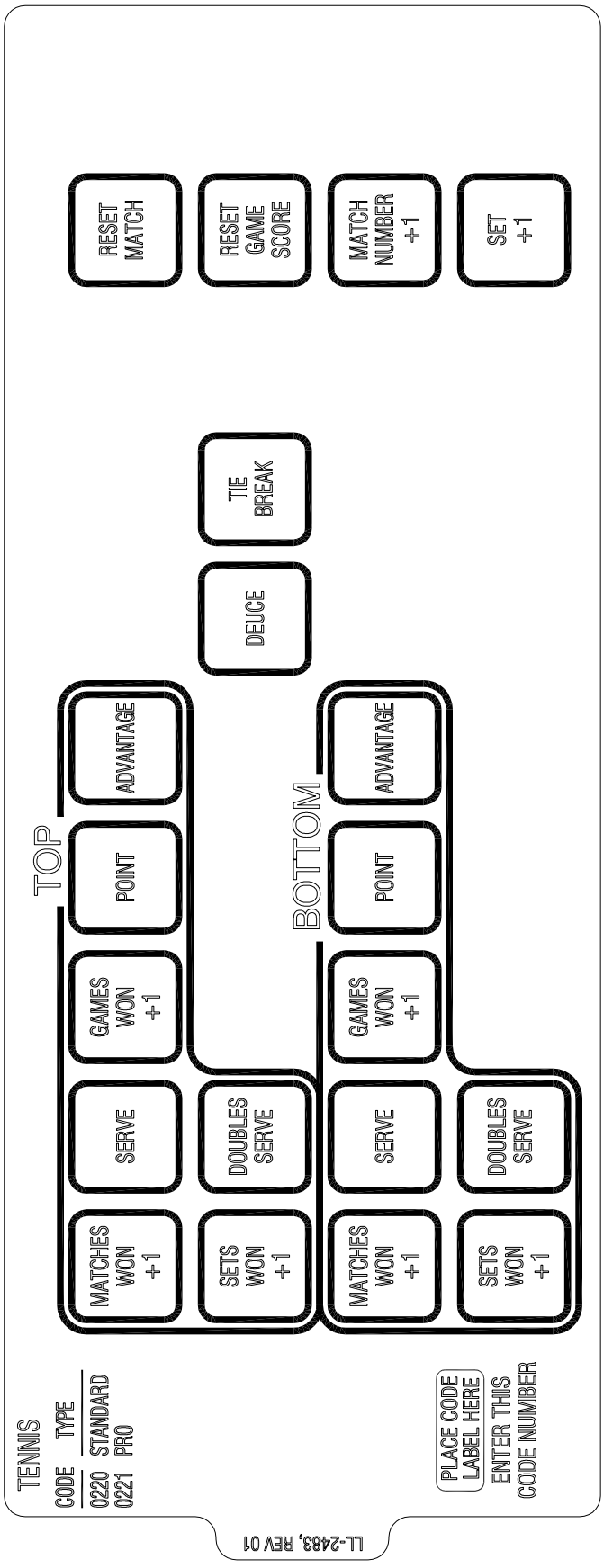

REV.	DATE	DESCRIPTION	BY	APPR.
01	12 MAY 03	ADDED PRO CODE. ADDED SETS WON +1 AND DOUBLES SERVE KEYS.	CJB	

DAKTRONICS, INC. BROOKINGS, SD 57006

PROJ: ALL SPORT 5000 SERIES CONSOLE

TITLE: INSERT, ALL SPORT 5000, TENNIS

DES. BY: EB DRAWN BY: E BRAVEK DATE: 25 APR 00

REVISION

APPR. BY:

SCALE: 1=1

1196-E07A-131274

REV.	DATE	DESCRIPTION	BY	APPR.

DAKTRONICS, INC. BROOKINGS, SD 57006

PROJ: ALL SPORT 5000 SERIES CONSOLE

TITLE: INSERT, SMART CLOCK CODES 1000, 6000

DES. BY: EB DRAWN BY: EBRAVEK DATE: 25 AUG 00

REVISION APPR. BY:

SCALE: 1=1

1196-E07A-136301

REV.	DATE	DESCRIPTION	BY	APPR.
01	16 APR 02	ADDED PROMOS 10-19	JJS	

DAKTRONICS, INC. BROOKINGS, SD 57006

PROJ: ALL SPORT 5000

TITLE: INSERT; STRIKE OUTS

DES. BY: JSPAHR DRAWN BY: JSPAHR DATE: 27 FEB 02

APPR. BY:

SCALE: 1=1

REVISION

1196-E07A-163409

REV.	DATE	DESCRIPTION	BY	APPR.
02	23 APR 02	CHANGED LAYOUT OF INSERT	JJS	
01	08APR01	TOOK AWAY ONE T FROM BATSMAN	JJS	

CRICKET

CODE

5599

06-164973, REV 02

DAKTRONICS, INC. BROOKINGS, SD 57006

PROJ:

TITLE: INSERT; CRICKET

DES. BY:

DRAWN BY: JSPAHR

DATE: 03APR02

REVISION 02

APPR. BY:

SCALE: 1=1

1000-E07A-164973

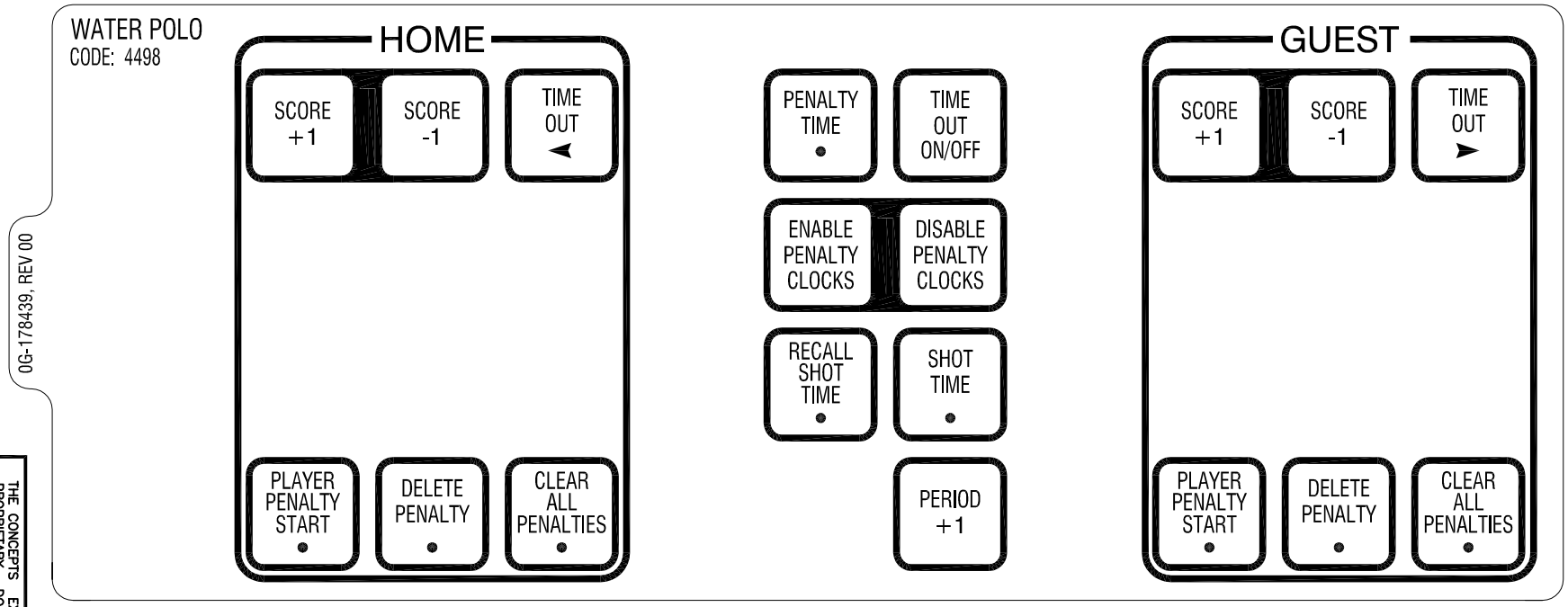

REV.	DATE	DESCRIPTION	BY	APPR.

THE CONCEPTS EXPRESSED AND DETAILS SHOWN ON THIS DRAWING ARE CONFIDENTIAL AND PROPRIETARY. DO NOT REPRODUCE BY ANY MEANS, INCLUDING ELECTRONICALLY WITHOUT THE EXPRESSED WRITTEN CONSENT OF DAKTRONICS, INC. COPYRIGHT 2002 DAKTRONICS, INC.

DAKTRONICS, INC. BROOKINGS, SD 57006

PROJ:

TITLE: INSERT; A/S 5000, WATER POLO

DES. BY: DRAWN BY: CBRECZI DATE: 13 NOV 02

REVISION APPR. BY:

SCALE: 1=1

1196-E07A-178439

Appendix C: Sports Code Numbers

Reference Drawings:

Address Table, 1 through 128 ..... **Drawing A-115078**
Address Table, 129 through 256 ..... **Drawing A-115079**
Protocol Table, 1 through 15 ..... **Drawing A-115081**
4 Column LED Driver II ..... **Drawing A-123783**
Relay Driver ..... **Drawing A-123791**
A/S 5000 Capable TNMC ..... **Drawing A-123794**
16 Column Driver III ..... **Drawing A-123940**
8 Column Driver III ..... **Drawing A-123941**
A/S 5000 Current Loop Output Specification ..... **Drawing A-128429**
16 Column LED Driver II ..... **Drawing A-126174**
16 Digit w/ Charger ..... **Drawing A-145791**
Spec; LED Driver IV, 16 Col ..... **Drawing A-288137**

Notes:

1) All scoreboards are controlled by a 16 column LED, incandescent, or glow cube driver except where noted by the column numbers to configure for a 4 column LED or an 8 column incandescent driver.

2) Use drawings A-115078 and A-115079 when setting the address for a 16 column LED or incandescent driver.

3) Use drawing A-123783 for a 4 column LED driver and drawing A-123941 for an 8 column incandescent driver when setting the address and column numbers.

4) Use drawing A-145791 for a 16 column glow cube driver when setting the address and protocol numbers.

C.1 Indoor Model Numbers

Model	Address	Basketball	Volleyball	Wrestling	Hockey	Football
BB-114	17	1105	2105	3105	4105	6105
BB-1113	12	1101,1102	2101	3101,3102		
BB-1813	12	1101,1102 [1]	2101,2111 [2]	3101,3102 [3]		
BB-2014	1 + Columns 5-8	All				All
BB-2015	1	All	All [4]	All [4]	All [4]	All
BB-2021	12	1101,1102	2101	3101,3102		
BB-2023	1	All	All [4]	All [4]	All [4]	All
BB-2025	12	1101,1102 [1]	2101,2111 [2]	3101,3102 [3]		
BB-2026	1 + Columns 5-8	All				All
BB-2027	12	1101,1102	2101	3101,3102		
BB-2028	12	1101,1102 [1]	2101,2111 [2]	3101,3102 [3]		
BB-2029	1	All	All [4]	All [4]	All [4]	All
BB-2031	13	1101,1102 [1]	2101,2111 [2]	3101,3102 [3]		
BB-2032	13	1101,1102 [1]	2101,2111 [2]	3101,3102 [3]		
BB-2033	1	All	All [4]	All [4]	All [4]	All
BB-2039	12	1101,1102	2101	3101,3102		
BB-2041	12,14	1105	2105	3105	4105	6105
BB-2042	12,14	1105	2105	3105	4105	6105

Model	Address	Basketball	Volleyball	Wrestling	Hockey	Football
BB-2046	12,14	1105	2105	3105	4105	6105
BB-2047	12,14	1105	2105	3105	4105	6105
BB-2101	17	1105	2105	3105	4105	6105
BB-2102	17	1105	2105	3105	4105	6105
BB-2103	17	1101,1102 [1]	2101,2111 [2]	3101,3102 [3]		
BB-2104	17	1101,1102 [1]	2101,2111 [2]	3101,3102 [3]		
BB-2105	17	1105	2105	3105	4105	6105
BB-2106	17	1105	2105	3105	4105	6105
BB-2107	17	1101,1102 [1]	2101,2111 [2]	3101,3102 [3]		
BB-2108	17	1101,1102 [1]	2101,2111 [2]	3101,3102 [3]		
BB-2109	1	All	All [4]	All [4]	All [4]	All
BB-2111	1	All	All [4]	All [4]	All [4]	All
BB-2112	17	1101,1102 [1]	2101,2111 [2]	3101,3102 [3]		
BB-2114	1 + Columns 5-8	All				All
BB-2115	1	All	All [4]	All [4]	All [4]	All
BB-2116	17	1105	2105	3105	4105	6105
BB-2117	14	1105	2105	3105	4105	6105
BB-2119	17	1101,1102 [1]	2101,2111 [2]	3101,3102 [3]		
BB-2120	14	1105	2105	3105	4105	6105
BB-2121	17	1105	2105	3105	4105	6105
BB-2122	17	1105	2105	3105	4105	6105
BB-2123	17,14	1105	2105	3105	4105	6105
BB-2124	17,14	1105	2105	3105	4105	6105
BB-2125	17	1101,1102 [1]	2101,2111 [2]	3101,3102 [3]		
BB-2126	17	1101,1102 [1]	2101,2111 [2]	3101,3102 [3]		
BB-2127	14	1105	2105	3105	4105	6105
BB-2128	1	All	All [4]	All [4]	All [4]	All
BB-2129	1	All	All [4]	All [4]	All [4]	All
BB-2130	1	All	All [4]	All [4]	All [4]	All
BB-2131	1	All	All [4]	All [4]	All [4]	All
BB-2132	1	All	All [4]	All [4]	All [4]	All
BB-2137	n/a	1101,1102 [1]	2101,2111 [2]	3101,3102 [3]		
BB-2142	17	1101	2101	3101	4105	6105
BB-2145	17	1101	2101	3101	4105	6105
BB-2146	17	1101	2101	3101	4105	6105
BB-2147	17	1101	2101	3101	4105	6105
BB-4413	12	1101,1102	2101	3101,3102		
BB-7213	12	1101,1102 [1]	2101,2111 [2]	3101,3102 [3]		
FP-15	21,22	1101,1102	2101,2111			
FP-257	23,24,25,26	1101,1102	2101,2111	3101		
H-213	n/a				4402	
H-413	74				4401,4402	
H-613	72,73				4401,4402	
H-1013	72,73				4401,4402	
H-2020	71	1402	2402		4401,4402	

Model	Address	Basketball	Volleyball	Wrestling	Hockey	Football
H-2021	71,72,73				4401,4402	
H-2022	71,72,73				4401,4402	
H-2023	71,72,73	1402	2402		4402	
H-2024	71,72,73	1402	2402		4402	
H-2025	71,72				4401	
H-2026	71,72				4401	
H-2030	71,72,73				4401,4402	
H-2031	71,72,73				4401,4402	
H-2101	71	1401,1402	2401,2402		4401,4402	
H-2102	72 or 73	1401,1402	2401,2402		4401,4402	
H-2103	n/a	1402	2402		4402	
H-2104	71,72,73	1402	2402		4402	
H-2105	71,72,73	1402	2402		4402	
H-2106	71,72,73	1402	2402		4401,4402	
H-2107	71,72,73	1402	2402		4401,4402	
H-2108	71,72,73				4401,4402	
H-2109	71,72,73				4401,4402	
H-2111	71	1401,1402	2401,2402		4401,4402	
H-2112	71	1401,1402	2401,2402		4401,4402	
H-2114	74	1401,1402	2401,2402		4401,4402	
H-2115	72,73				4401,4402	
MS-2016	13	1103	2103	3103	4103	6103
SD-2001	23,24,25,26	1101,1102	2101	3101		
SD-2002	23,24,25,26,27,28	1101,1102	2101	3101		
SD-2003	15		2105	3105	4105	
SD-2004	14	1105	2105	3105	4105	6105
SD-2101	23,24,25,26	1101,1102	2101	3101		
SD-2102	23,24,25,26	1101,1102	2101	3101		
SD-2103	23,24,25,26,27,28	1101,1102	2101	3101		
SD-2104	23,24,25,26,27,28	1101,1102	2101	3101		
SD-2105	21,22	1101,1102	2101,2111			
SD-2106	15		2105	3105	4105	
SD-2107	15		2105	3105	4105	
TI-413	1 + Columns 1-4	All	All	All	All	All
TI-2002	1 + Columns 1-4	All	All	All	All	All
TI-2003	2	All				All
TI-2007	1 + Columns 1-4	All	All	All	All	All
TI-2010	2	All				All
TI-2011	1 + Columns 1-4	All	All	All	All	All
TI-2013	1 + Columns 1-4	All	All	All	All	All
TI-2014	2 + Columns 1-4	All				All
TI-2015	2	All				All
TI-2019	1	All	All	All	All	All
TI-2101	1	All	All	All	All	All

Model	Address	Basketball	Volleyball	Wrestling	Hockey	Football
TI-2102	1	All	All	All	All	All
TI-2200	4	All	All	All	All	All
VB-2001	12		2105			
VB-2002	15		2105			
VB-2101	17		2105			
WR-2024	104			3304		
WR-2025	104			3304		
WR-2026	104			3304		
WR-2027	n/a			3304		
WR-2028	n/a			3304		
WR-2029	n/a			3304		
WR-2101	104			3304		
WR-2102	104			3304		
WR-2103	104			3304		
WR-2104	n/a			3304		
WR-2105	n/a			3304		
WR-2106	n/a			3304		
Model #2510	13,29,30	1104	2104	3104	4104	6104
Model #2520	13	1104	2104	3104	4104	6104
Model #2530	13,31,32	1104	2104	3104	4104	6104
Model #3030	13,23,24,25,26	1103	2103	3103	4103	6103
Model #3040	13,23,24,25,26	1103	2103	3103	4103	6103
Model #3050	13,23,24,25,26	1103	2103	3103	4103	6103
Model #3510	TBD	TBD	TBD	TBD	TBD	TBD
Model #3520	TBD	TBD	TBD	TBD	TBD	TBD
Model #3530	TBD	TBD	TBD	TBD	TBD	TBD
Model #4010	13	1103,1104	2103,2104	3103,3104	4103,4104	6103,6104
Model #4020	13	1103,1104	2103,2104	3103,3104	4103,4104	6103,6104
Model #4030	13	1103,1104	2103,2104	3103,3104	4103,4104	6103,6104
Model #4040	13	1103,1104	2103,2104	3103,3104	4103,4104	6103,6104
Model #4050	13	1103,1104	2103,2104	3103,3104	4103,4104	6103,6104
Model #4060	13	1103,1104	2103,2104	3103,3104	4103,4104	6103,6104
Model #4070	13	1103,1104	2103,2104	3103,3104	4103,4104	6103,6104
Model #4080	13	1103,1104	2103,2104	3103,3104	4103,4104	6103,6104
Model #4100	13	1103,1104	2103,2104	3103,3104	4103,4104	6103,6104
Model #4110	TBD	TBD	TBD	TBD	TBD	TBD
Model #4510	TBD	TBD	TBD	TBD	TBD	TBD
Model #4520	TBD	TBD	TBD	TBD	TBD	TBD
Model #4530	TBD	TBD	TBD	TBD	TBD	TBD

Notes:
1) code 1101 is Player-Foul and code 1102 is Foul-Player
2) code 2101 is Game Number & Match Number and code 2111 is Game Number only
3) code 3101 is Match Number and code 3102 is Advantage Time
4) Game Clock only

C.2 Outdoor Model Numbers

Model	Address	Baseball	Football	Soccer	Track	Lacrosse
BA-515	61 + Columns 1-8	5501				
BA-518	61 + Columns 1-8	5501				
BA-618	61 + Columns 1-8	5501				
BA-624	61 + Columns 1-8	5501				
BA-718	62 + Columns 1-8	5501				
BA-1018	12	5501				
BA-1518	63	5501				
BA-1524	63	5501				
BA-2001	67,68,69	5501				
BA-2002	67,68,69	5501				
BA-2004	67,68,69	5501				
BA-2005	67,68,69	5501				
BA-2006	11,64,65,66	5500 & 5501 [3]				
BA-2007	11,64,65,66	5500 & 5501 [3]				
BA-2008	11,67,68,69	5500 & 5501 [3]				
BA-2009	11,67,68,69	5500 & 5501 [3]				
BA-2010	61	5501				
BA-2011	11,67,68,69	5500 & 5501 [3]				
BA-2012	61	5501				
BA-2013	64,65,66,4,11	5500 & 5501 [3]				
BA-2014	67,68,69	5501				
BA-2017	61	5501				
BA-2018	64,65,66,1	5501				
BA-2019	67,68,69	5501				
BA-2022	64,70	5501				
BA-2515-31	61	5501				
BA-2618-31	61	5501				
BA-2715-31	62	5501				
BA-2718-31	62	5501				
BA-3718	64,65,66	5501				
BA-3724	64,65,66	5501				
FB-824	11		6601	7601		4601
FB-1424	12	5601,5602 [1]	6601	7601		4601
FB-1430	12	5601,5602 [1]	6601	7601		4601
FB-1524	12	5601,5602 [1]	6601	7601	8601 [2]	4601
FB-1530	12	5601,5602 [1]	6601	7601	8601 [2]	4601
FB-1624	15,16	5601,5602 [1]	6601	7601	8601 [2]	4601

Model	Address	Baseball	Football	Soccer	Track	Lacrosse
FB-1630	15,16	5601,5602 [1]	6601	7601		4601
FB-1630L	15,16	5601,5602 [1]	6601	7601		4601
FB-1730	15,16	5601,5602 [1]	6601	7601	8601 [2]	4601
FB-1830	15,16	5601,5602 [1]	6601	7601	8601 [2]	4601
FB-1830L	15,16	5601,5602 [1]	6601	7601	8601 [2]	4601
FB-2001	15,16	5601,5602 [1]	6601	7601	8601 [2]	4601
FB-2002	15,16	5601,5602 [1]	6601	7601		4601
FB-2003	15,16	5601,5602 [1]	6601	7601	8601 [2]	4601
FB-2004	15,16	5601,5602 [1]	6601	7601		4601
FB-2005	11		6601	7601		4601
FB-2018	15,19	5601,5602 [1]	6601	7601	8601 [2]	4601
FB-2019	15,19	5601,5602 [1]	6601	7601	8601 [2]	4601
FB-2020	15,19	5601,5602 [1]	6601	7601	8601 [2]	4601
FB-2021	15,19	5601,5602 [1]	6601	7601	8601 [2]	4601
FB-2022	15,19	5601,5602 [1]	6601	7601	8601 [2]	4601
FB-2023	15,19	5601,5602 [1]	6601	7601	8601 [2]	4601
FB-2350	12,15		6601	7601		4601
FB-2100	TBD	TBD	TBD	TBD	TBD	TBD
FB-2110	TBD	TBD	TBD	TBD	TBD	TBD
FB-2120	TBD	TBD	TBD	TBD	TBD	TBD
FB-2130	TBD	TBD	TBD	TBD	TBD	TBD
FB-2140	TBD	TBD	TBD	TBD	TBD	TBD
FB-2150	TBD	TBD	TBD	TBD	TBD	TBD
FB-2160	TBD	TBD	TBD	TBD	TBD	TBD
FB-2170	TBD	TBD	TBD	TBD	TBD	TBD
FB-2180	21,22,23		6611			
FB-2190	TBD	TBD	TBD	TBD	TBD	TBD
FB-2200	TBD	TBD	TBD	TBD	TBD	TBD
FB-2210	TBD	TBD	TBD	TBD	TBD	TBD
FB-2220	TBD	TBD	TBD	TBD	TBD	TBD
FB-2230	TBD	TBD	TBD	TBD	TBD	TBD
FB-2240	TBD	TBD	TBD	TBD	TBD	TBD
FB-2300	TBD	TBD	TBD	TBD	TBD	TBD
FB-2310	TBD	TBD	TBD	TBD	TBD	TBD
FB-2320	TBD	TBD	TBD	TBD	TBD	TBD
FB-2330	TBD	TBD	TBD	TBD	TBD	TBD
FB-2250	TBD	TBD	TBD	TBD	TBD	TBD
FB-2260	TBD	TBD	TBD	TBD	TBD	TBD
FB-2270	TBD	TBD	TBD	TBD	TBD	TBD
FB-2280	TBD	TBD	TBD	TBD	TBD	TBD
FB-2290	TBD	TBD	TBD	TBD	TBD	TBD
FB-2360	TBD	TBD	TBD	TBD	TBD	TBD
FB-2370	TBD	TBD	TBD	TBD	TBD	TBD
FB-2380	TBD	TBD	TBD	TBD	TBD	TBD

Model	Address	Baseball	Football	Soccer	Track	Lacrosse
SO-824	11		6601	7701		4701
SO-918	11	5601	6601	7701		4701
SO-1424	12	5601,5602 [1]	6601	7701		4701
SO-1624	13,14	5601,5602 [1]	6601	7701		4701
SO-1830	15,16		6601	7701		4701
SO-1830L	15,16		6601	7701		4701
SO-1930	15,16		6601	7701	8601 [2]	4701
SO-2008	17	5601,5602 [1]	6601	7601		4701
SO-2009	11	5601	6601	7701		4701
SO-2010	11	5601	6601	7701		4701
SO-2011	11,17			7711		
SO-2013	13,14	5601	6601	7701		4701
SO-2018	15,19	5601,5602 [1]	6601	7701		4701
SO-2019	15,19	5601,5602 [1]	6601	7701		4701
SO-2021	15,19	5601,5602 [1]	6601	7701		4701
SO-2022	15,19	5601,5602 [1]	6601	7701	8601 [2]	4701
SO-2023	15,19	5601,5602 [1]	6601	7701	8601 [2]	4701
SO-2030	15,16		6601	7701	8601 [2]	4701
SO-2031	11,17			7711		
MS-915	11	5601	6601	7601		4601
MS-918	11	5601	6601	7601		4601
MS-2002	11	5601	6601	7601		4601
MS-2003	11	5601	6601	7601		4601
MS-2004	74,75					4601
MS-2006	11	5601	6601	7601		4601
MS-2009	71,72		6601	7601		4601
MS-2011	11	5601	6601	7601		4601
MS-2012	74,75					4601
MS-2014	71,72,73		6601	7601		4601
MS-2015	71		6601	7601		4601
MS-2016	TBD	TBD	TBD	TBD	TBD	TBD
MS-2017	TBD	TBD	TBD	TBD	TBD	TBD
MS-2018	71,72,73		6601	7601		4601
MS-2118	71,72		6601	7601		4601
MS-2918	71,72		6601	7601		4601
TI-218	2		All			All
TI-418	1	All	All	All	All	All
TI-2002	1 + Columns 1-4	All	All	All	All	All
TI-2003	2		All			All
TI-2007	1 + Columns 1-4	All	All	All	All	All
TI-2010	2		All			All
TI-2011	1 + Columns 1-4	All	All	All	All	All
TI-2013	1 + Columns 1-4	All	All	All	All	All
TI-2014	2 + Columns 1-4		All			All
TI-2015	2		All			All

Model	Address	Baseball	Football	Soccer	Track	Lacrosse
TI-2019	1	All	All	All	All	All
TI-2101	1	All	All	All	All	All

Notes:

1) Code 5601 is With Clock and code 5602 is With Out Clock.

2) To receive data from an external timer substitute code 8602 for the Omega PowerTime and code 8603 for the Daktronics Omni Sport 1000/6000.

3) Requires two (2) consoles to operate scoreboard.

C.3 Miscellaneous Model Numbers

Model	Address	Sport	Code
CR-2001	11	Cricket	5599
BA-2003	11	Pitch & Speed	5500
CT-2001	1	Pitch & Speed	5500
CT-2002	1	Pitch & Speed	5500
CT-2003	1 + Columns 1-4	Pitch & Speed	5500
CT-2004	1 + Columns 1-4	Pitch & Speed	5500
CT-2005	1	Pitch & Speed	5500
CT-2009	1 + Columns 1-4	Pitch & Speed	5500
TI-2003	2	Pitch & Speed	5500
CT-2001	1	Event Timer	372,374,376
CT-2002	1	Event Timer	372,374,376
CT-2003	1 + Columns 1-4	Event Timer	372,374,376
CT-2004	1 + Columns 1-4	Event Timer	372,374,376
CT-2005	1	Event Timer	372,374,376
CT-2006	1 + Columns 1-4	Event Timer	372,374,376
CT-2007	1 + Columns 1-4	Event Timer	372,374,376
CT-2008	1 + Columns 1-4	Event Timer	372,374,376
CT-2009	1 + Columns 1-4	Event Timer	372,374,376
MS-2007	10	Rugby	7701
BB-2014	1 + Columns 5-8	Multi-Purpose Timer	99
TI-413	1 + Columns 1-4	Multi-Purpose Timer	99
TI-418	1 + Columns 1-4	Multi-Purpose Timer	99
TI-2002	1 + Columns 1-4	Multi-Purpose Timer	99
TI-2003	2	Multi-Purpose Timer	99
TI-2006	22	Multi-Purpose Timer	99
TI-2007	1 + Columns 1-4	Multi-Purpose Timer	99
TI-2009	22	Multi-Purpose Timer	99
TI-2010	2 + Columns 1-4	Multi-Purpose Timer	99
TI-2011	1 + Columns 1-4	Multi-Purpose Timer	99

Model	Address	Sport	Code
TI-2013	1 + Columns 1-4	Multi-Purpose Timer	99
TI-2014	2 + Columns 1-4	Multi-Purpose Timer	99
TI-2015	2 + Columns 1-4	Multi-Purpose Timer	99
RO-2002	11	Rodeo	8000 [1]
RO-2005	11	Rodeo	8000 [1]
RO-2006	11	Rodeo	8000 [1]
RO-2008	12	Rodeo	8000 [1]
RO-2009	12	Rodeo	8000 [1]
RO-2010	12	Rodeo	8000 [1]
RO-2011	12	Rodeo	8000 [1]
BB-2015	1	Segment Timer	100
FB-2340	1	Segment Timer	100
TI-2010	2 + Columns 1-4	Segment Timer	100
TI-2012	1	Segment Timer	100
TI-2015	2 + Columns 1-4	Segment Timer	100
BB-114	17	Tennis	220
BB-2041	12,14	Tennis	220
BB-2042	12,14	Tennis	220
BB-2046	12,14	Tennis	220
BB-2047	12,14	Tennis	220
BB-2101	17	Tennis	220
BB-2102	17	Tennis	220
BB-2105	17	Tennis	220
BB-2106	17	Tennis	220
BB-2116	17	Tennis	220
BB-2117	14	Tennis	220
BB-2121	17	Tennis	220
BB-2122	17	Tennis	220
BB-2123	17,14	Tennis	220
BB-2124	17,14	Tennis	220
TN-2007	11	Tennis	220
TN-2008	11	Tennis	220
TN-2009	74	Tennis	220
TN-2016	11	Tennis	220
TN-2501	11	Tennis	220
TN-2603	11	Tennis	220
TN-2604	11	Tennis	220
TN-2605	74	Tennis	220
WR-2021	101	Judo	281 or 284
WR-2022	102	Karate	282 or 285
WR-2023	103	Tae Kwon Do	283 or 286

Model	Address	Sport	Code
Game/Shot Clock Console	1,2	Basketball	1000
Game/Play Clock Console	1,2	Football	6000
Shots On Goal Console	74	Hockey	4000
See Table for Indoor Models	1,2,12,13,17	Boxing	291

Relay Driver	220		
TNMC – Home/Guest Team Name	221	Team Name	98
TNMC – Player-Foul-Points Caption	223		

Notes:
1) Code 8000 is available on the All Sport 5100 console only.

C.4 Custom Indoor Facility

Site	Contract	Basketball	Volleyball	Wrestling	Hockey	Football
Belgrade Arena		9100	9200	9300	9400 9409	
American Airlines Center	C9443	9101			9401	9601
Resch Center	C10014	9102	9202	9302	9402	9602
Bismark Civic Center	C10379	9104				
Coliseo De Puerto Rico SE Texas Entertainment Tyson/IBP Events Center	C10617 C10713 C10976	9105	9205		9405	9605
University of South Dakota		9107	9207	9307(resv)		9607
Brigham Young Univ. Custom contract retrofit		9108				
Belgrade Arena (see above) Custom handball (3 pen)					9409	
Georgia Dome	C13404	9111				
Madison Square Garden	C14199	9112		Boxing 9901	9412	

C.5 Custom Outdoor Facility

Site	Contract	Baseball	Football	Soccer	Track	Lacrosse
SUNY Cortland	C10032		9603	9703		9403
3COM Park	C11471		9606			
University of South Carolina Custom contract retrofit	SVO 238271		9610			

KEY: 0 = WIRE NOT CONNECTED 1 = WIRE IS CONNECTED

DECIMAL ADDRESS	PIN 12	PIN 11	PIN 9	PIN 8	PIN 6	PIN 5	PIN 3	PIN 2
1	0	0	0	0	0	0	0	1
2	0	0	0	0	0	0	1	0
3	0	0	0	0	0	0	1	1
4	0	0	0	0	0	1	0	0
5	0	0	0	0	0	1	0	1
6	0	0	0	0	0	1	1	0
7	0	0	0	0	0	1	1	1
8	0	0	0	0	1	0	0	0
9	0	0	0	0	1	0	0	1
10	0	0	0	0	1	0	1	0
11	0	0	0	0	1	0	1	1
12	0	0	0	0	1	1	0	0
13	0	0	0	0	1	1	0	1
14	0	0	0	0	1	1	1	0
15	0	0	0	0	1	1	1	1
16	0	0	0	1	0	0	0	0
17	0	0	0	1	0	0	0	1
18	0	0	0	1	0	0	1	0
19	0	0	0	1	0	0	1	1
20	0	0	0	1	0	1	0	0
21	0	0	0	1	0	1	0	1
22	0	0	0	1	0	1	1	0
23	0	0	0	1	0	1	1	1
24	0	0	0	1	1	0	0	0
25	0	0	0	1	1	0	0	1
26	0	0	0	1	1	0	1	0
27	0	0	0	1	1	0	1	1
28	0	0	0	1	1	1	0	0
29	0	0	0	1	1	1	0	1
30	0	0	0	1	1	1	1	0
31	0	0	0	1	1	1	1	1
32	0	0	1	0	0	0	0	0
33	0	0	1	0	0	0	0	1
34	0	0	1	0	0	0	1	0
35	0	0	1	0	0	0	1	1
36	0	0	1	0	0	1	0	0
37	0	0	1	0	0	1	0	1
38	0	0	1	0	0	1	1	0
39	0	0	1	0	0	1	1	1
40	0	0	1	0	1	0	0	0
41	0	0	1	0	1	0	0	1
42	0	0	1	0	1	0	1	0
43	0	0	1	0	1	0	1	1
44	0	0	1	0	1	1	0	0
45	0	0	1	0	1	1	0	1
46	0	0	1	0	1	1	1	0
47	0	0	1	0	1	1	1	1
48	0	0	1	1	0	0	0	0
49	0	0	1	1	0	0	0	1
50	0	0	1	1	0	0	1	0
51	0	0	1	1	0	0	1	1
52	0	0	1	1	0	1	0	0
53	0	0	1	1	0	1	0	1
54	0	0	1	1	0	1	1	0
55	0	0	1	1	0	1	1	1
56	0	0	1	1	1	0	0	0
57	0	0	1	1	1	0	0	1
58	0	0	1	1	1	0	1	0
59	0	0	1	1	1	0	1	1
60	0	0	1	1	1	1	0	0
61	0	0	1	1	1	1	0	1
62	0	0	1	1	1	1	1	0
63	0	0	1	1	1	1	1	1
64	0	1	0	0	0	0	0	0
65	0	1	0	0	0	0	0	1
66	0	1	0	0	0	0	1	0
67	0	1	0	0	0	0	1	1
68	0	1	0	0	0	1	0	0
69	0	1	0	0	0	1	0	1
70	0	1	0	0	0	1	1	0
71	0	1	0	0	0	1	1	1
72	0	1	0	0	1	0	0	0
73	0	1	0	0	1	0	0	1
74	0	1	0	0	1	0	1	0
75	0	1	0	0	1	0	1	1
76	0	1	0	0	1	1	0	0
77	0	1	0	0	1	1	0	1
78	0	1	0	0	1	1	1	0
79	0	1	0	0	1	1	1	1
80	0	1	0	1	0	0	0	0
81	0	1	0	1	0	0	0	1
82	0	1	0	1	0	0	1	0
83	0	1	0	1	0	0	1	1
84	0	1	0	1	0	1	0	0
85	0	1	0	1	0	1	0	1
86	0	1	0	1	0	1	1	0
87	0	1	0	1	0	1	1	1
88	0	1	0	1	1	0	0	0
89	0	1	0	1	1	0	0	1
90	0	1	0	1	1	0	1	0
91	0	1	0	1	1	0	1	1
92	0	1	0	1	1	1	0	0
93	0	1	0	1	1	1	0	1
94	0	1	0	1	1	1	1	0
95	0	1	0	1	1	1	1	1
96	0	1	1	0	0	0	0	0
97	0	1	1	0	0	0	0	1
98	0	1	1	0	0	0	1	0
99	0	1	1	0	0	0	1	1
100	0	1	1	0	0	1	0	0
101	0	1	1	0	0	1	0	1
102	0	1	1	0	0	1	1	0
103	0	1	1	0	0	1	1	1
104	0	1	1	0	1	0	0	0
105	0	1	1	0	1	0	0	1
106	0	1	1	0	1	0	1	0
107	0	1	1	0	1	0	1	1
108	0	1	1	0	1	1	0	0
109	0	1	1	0	1	1	0	1
110	0	1	1	0	1	1	1	0
111	0	1	1	0	1	1	1	1
112	0	1	1	1	0	0	0	0
113	0	1	1	1	0	0	0	1
114	0	1	1	1	0	0	1	0
115	0	1	1	1	0	0	1	1
116	0	1	1	1	0	1	0	0
117	0	1	1	1	0	1	0	1
118	0	1	1	1	0	1	1	0
119	0	1	1	1	0	1	1	1
120	0	1	1	1	1	0	0	0
121	0	1	1	1	1	0	0	1
122	0	1	1	1	1	0	1	0
123	0	1	1	1	1	0	1	1
124	0	1	1	1	1	1	0	0
125	0	1	1	1	1	1	0	1
126	0	1	1	1	1	1	1	0
127	0	1	1	1	1	1	1	1
128	1	0	0	0	0	0	0	0

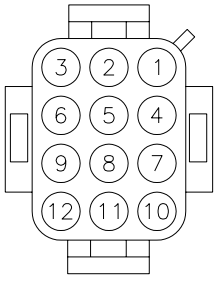

ADDRESS PLUG
WIRE SIDE

WIRING DIAGRAM

ADDRESS PLUG
WITH ALL WIRES
CONNECTED

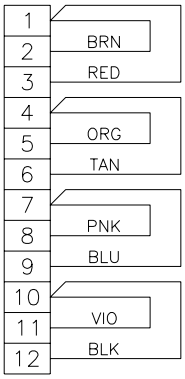

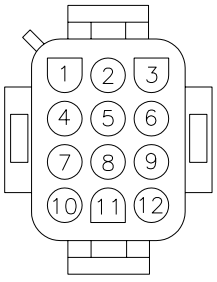

BOTTOM VIEW

REV.	DATE	DESCRIPTION	BY	APPR.
01	08 MAR 05	ADDED BOTTOM VIEW	KQB	

DAKTRONICS, INC. BROOKINGS, SD 57006

PROJ:

TITLE: ADDRESS TABLE, 1 THROUGH 128

DES. BY: AVB DRAWN BY: A VANBEMMEL DATE: 28 APR 99

REVISION 01 APPR. BY:

SCALE: NONE

1150-R04A-115078

KEY: 0 = WIRE NOT CONNECTED 1 = WIRE IS CONNECTED

DECIMAL ADDRESS	PIN 12	PIN 11	PIN 9	PIN 8	PIN 6	PIN 5	PIN 3	PIN 2
129	1	0	0	0	0	0	0	1
130	1	0	0	0	0	0	1	0
131	1	0	0	0	0	0	1	1
132	1	0	0	0	0	1	0	0
133	1	0	0	0	0	1	0	1
134	1	0	0	0	0	1	1	0
135	1	0	0	0	0	1	1	1
136	1	0	0	0	1	0	0	0
137	1	0	0	0	1	0	0	1
138	1	0	0	0	1	0	1	0
139	1	0	0	0	1	0	1	1
140	1	0	0	0	1	1	0	0
141	1	0	0	0	1	1	0	1
142	1	0	0	0	1	1	1	0
143	1	0	0	0	1	1	1	1
144	1	0	0	1	0	0	0	0

DECIMAL ADDRESS	PIN 12	PIN 11	PIN 9	PIN 8	PIN 6	PIN 5	PIN 3	PIN 2
145	1	0	0	1	0	0	0	1
146	1	0	0	1	0	0	1	0
147	1	0	0	1	0	0	1	1
148	1	0	0	1	0	1	0	0
149	1	0	0	1	0	1	0	1
150	1	0	0	1	0	1	1	0
151	1	0	0	1	0	1	1	1
152	1	0	0	1	1	0	0	0
153	1	0	0	1	1	0	0	1
154	1	0	0	1	1	0	1	0
155	1	0	0	1	1	0	1	1
156	1	0	0	1	1	1	0	0
157	1	0	0	1	1	1	0	1
158	1	0	0	1	1	1	1	0
159	1	0	0	1	1	1	1	1
160	1	0	1	0	0	0	0	0

DECIMAL ADDRESS	PIN 12	PIN 11	PIN 9	PIN 8	PIN 6	PIN 5	PIN 3	PIN 2
161	1	0	1	0	0	0	0	1
162	1	0	1	0	0	0	1	0
163	1	0	1	0	0	0	1	1
164	1	0	1	0	0	1	0	0
165	1	0	1	0	0	1	0	1
166	1	0	1	0	0	1	1	0
167	1	0	1	0	0	1	1	1
168	1	0	1	0	1	0	0	0
169	1	0	1	0	1	0	0	1
170	1	0	1	0	1	0	1	0
171	1	0	1	0	1	0	1	1
172	1	0	1	0	1	1	0	0
173	1	0	1	0	1	1	0	1
174	1	0	1	0	1	1	1	0
175	1	0	1	0	1	1	1	1
176	1	0	1	1	0	0	0	0

DECIMAL ADDRESS	PIN 12	PIN 11	PIN 9	PIN 8	PIN 6	PIN 5	PIN 3	PIN 2
177	1	0	1	1	0	0	0	1
178	1	0	1	1	0	0	1	0
179	1	0	1	1	0	0	1	1
180	1	0	1	1	0	1	0	0
181	1	0	1	1	0	1	0	1
182	1	0	1	1	0	1	1	0
183	1	0	1	1	0	1	1	1
184	1	0	1	1	1	0	0	0
185	1	0	1	1	1	0	0	1
186	1	0	1	1	1	0	1	0
187	1	0	1	1	1	0	1	1
188	1	0	1	1	1	1	0	0
189	1	0	1	1	1	1	0	1
190	1	0	1	1	1	1	1	0
191	1	0	1	1	1	1	1	1
192	1	1	0	0	0	0	0	0

DECIMAL ADDRESS	PIN 12	PIN 11	PIN 9	PIN 8	PIN 6	PIN 5	PIN 3	PIN 2
193	1	1	0	0	0	0	0	1
194	1	1	0	0	0	0	1	0
195	1	1	0	0	0	0	1	1
196	1	1	0	0	0	1	0	0
197	1	1	0	0	0	1	0	1
198	1	1	0	0	0	1	1	0
199	1	1	0	0	0	1	1	1
200	1	1	0	0	1	0	0	0
201	1	1	0	0	1	0	0	1
202	1	1	0	0	1	0	1	0
203	1	1	0	0	1	0	1	1
204	1	1	0	0	1	1	0	0
205	1	1	0	0	1	1	0	1
206	1	1	0	0	1	1	1	0
207	1	1	0	0	1	1	1	1
208	1	1	0	1	0	0	0	0

DECIMAL ADDRESS	PIN 12	PIN 11	PIN 9	PIN 8	PIN 6	PIN 5	PIN 3	PIN 2
209	1	1	0	1	0	0	0	1
210	1	1	0	1	0	0	1	0
211	1	1	0	1	0	0	1	1
212	1	1	0	1	0	1	0	0
213	1	1	0	1	0	1	0	1
214	1	1	0	1	0	1	1	0
215	1	1	0	1	0	1	1	1
216	1	1	0	1	1	0	0	0
217	1	1	0	1	1	0	0	1
218	1	1	0	1	1	0	1	0
219	1	1	0	1	1	0	1	1
220	1	1	0	1	1	1	0	0
221	1	1	0	1	1	1	0	1
222	1	1	0	1	1	1	1	0
223	1	1	0	1	1	1	1	1
224	1	1	1	0	0	0	0	0

DECIMAL ADDRESS	PIN 12	PIN 11	PIN 9	PIN 8	PIN 6	PIN 5	PIN 3	PIN 2
225	1	1	1	0	0	0	0	1
226	1	1	1	0	0	0	1	0
227	1	1	1	0	0	0	1	1
228	1	1	1	0	0	1	0	0
229	1	1	1	0	0	1	0	1
230	1	1	1	0	0	1	1	0
231	1	1	1	0	0	1	1	1
232	1	1	1	0	1	0	0	0
233	1	1	1	0	1	0	0	1
234	1	1	1	0	1	0	1	0
235	1	1	1	0	1	0	1	1
236	1	1	1	0	1	1	0	0
237	1	1	1	0	1	1	0	1
238	1	1	1	0	1	1	1	0
239	1	1	1	0	1	1	1	1
240	1	1	1	1	0	0	0	0

DECIMAL ADDRESS	PIN 12	PIN 11	PIN 9	PIN 8	PIN 6	PIN 5	PIN 3	PIN 2
241	1	1	1	1	0	0	0	1
242	1	1	1	1	0	0	1	0
243	1	1	1	1	0	0	1	1
244	1	1	1	1	0	1	0	0
245	1	1	1	1	0	1	0	1
246	1	1	1	1	0	1	1	0
247	1	1	1	1	0	1	1	1
248	1	1	1	1	1	0	0	0
249	1	1	1	1	1	0	0	1
250	1	1	1	1	1	0	1	0
251	1	1	1	1	1	0	1	1
252	1	1	1	1	1	1	0	0
253	1	1	1	1	1	1	0	1
254	1	1	1	1	1	1	1	0
255	1	1	1	1	1	1	1	1

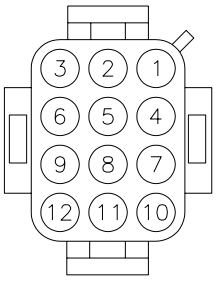

ADDRESS PLUG
WIRE SIDE

WIRING DIAGRAM
ADDRESS PLUG
WITH ALL WIRES
CONNECTED

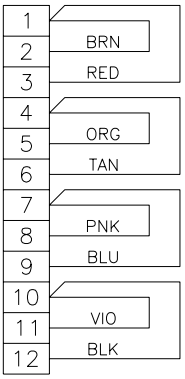

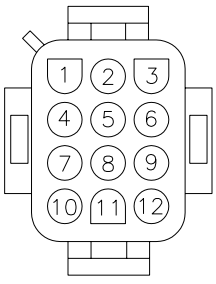

BOTTOM VIEW

REV.	DATE	DESCRIPTION	BY	APPR.
01	08 MAR 05	ADDED BOTTOM VIEW	KQB	

DAKTRONICS, INC. BROOKINGS, SD 57006

PROJ:

TITLE: ADDRESS TABLE, 129 THROUGH 255

DES. BY: AVB DRAWN BY: A VANBEMMEL DATE: 28 APR 99

REVISION 01 APPR. BY:

SCALE: NONE

1150-R04A-115079

PROTOCOL ADDRESS TABLE

DECIMAL ADDRESS	PIN 5	PIN 4	PIN 3	PIN 2	BINARY ADDRESS
1	0	0	0	1	
2	0	0	1	0	
3	0	0	1	1	
4	0	1	0	0	
5	0	1	0	1	
6	0	1	1	0	
7	0	1	1	1	

KEY:
0 = WIRE NOT CONNECTED
1 = WIRE IS CONNECTED

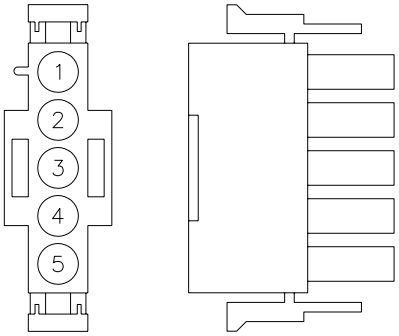

PROTOCOL PLUG
WIRE SIDE

SIDE VIEW

TIME OF DAY ENABLE

	PIN 5	PIN 4	PIN 3	PIN 2
8	1	0	0	0

WIRING DIAGRAM
PROTOCOL PLUG WITH ALL WIRES CONNECTED

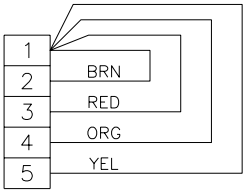

PROTOCOL ADDRESS NUMBER	PROTOL FUNCTION
1	DAKTRONICS / OMEGA MULTILINE SWIM
2	CTS MULTILINE SWIM
3–7	NOT DEFINED
8	STAND ALONE TIME OF DAY ENABLE

REV.	DATE	DESCRIPTION	BY	APPR.
01	29 DEC 99	ADDED TOD ENABLE ADDRESS 8	EB	

DAKTRONICS, INC. BROOKINGS, SD 57006

PROJ:

TITLE: PROTOCOL TABLE, 1 THROUGH 15

DES. BY: AVB DRAWN BY: A VANBEMMEL DATE: 28 APR 99

REVISION 01 APPR. BY:

SCALE: NONE

1150-R04A-115081

KEY: 0 = WIRE NOT CONNECTED 1 = WIRE IS CONNECTED TO ANY GROUND PIN (1,4,7,10)

J19 ADDRESS AND COLUMN SELECT JACK

DECIMAL ADDRESS	PIN 8	PIN 6	PIN 5	PIN 3	PIN 2
1	0	0	0	0	1
2	0	0	0	1	0
3	0	0	0	1	1
4	0	0	1	0	0
5	0	0	1	0	1
6	0	0	1	1	0
7	0	0	1	1	1
8	0	1	0	0	0
9	0	1	0	0	1
10	0	1	0	1	0
11	0	1	0	1	1
12	0	1	1	0	0
13	0	1	1	0	1
14	0	1	1	1	0
15	0	1	1	1	1
16	1	0	0	0	0

DECIMAL ADDRESS	PIN 8	PIN 6	PIN 5	PIN 3	PIN 2
17	1	0	0	0	1
18	1	0	0	1	0
19	1	0	0	1	1
20	1	0	1	0	0
21	1	0	1	0	1
22	1	0	1	1	0
23	1	0	1	1	1
24	1	1	0	0	0
25	1	1	0	0	1
26	1	1	0	1	0
27	1	1	0	1	1
28	1	1	1	0	0
29	1	1	1	0	1
30	1	1	1	1	0
31	1	1	1	1	1

TIME OF DAY SELECT	PIN 9
DISABLE	0
ENABLE	1

COLUMN SELECT	PIN 12	PIN 11
COLUMNS 5-8	0	0
COLUMNS 1-4	0	1
COLUMNS 9-12	1	0
COLUMNS 13-16	1	1

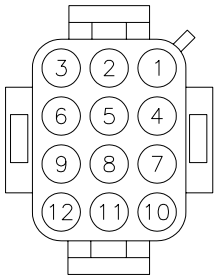

ADDRESS PLUG
WIRE SIDE

WIRING DIAGRAM
ADDRESS PLUG
WITH ALL WIRES
CONNECTED

J17 MAIN	
PIN	FUNCTION
1	SIG-P
2	SIG-N
3	GND-N
4	CLOUT-P
5	CLOUT-N
6	16VAC-N
7	GND-N
8	EARTH-N
9	16VAC-P
10	GND-N
11	SWIN-P
12	SWIN-N

J1-4 DIGIT	
PIN	FUNCTION
1	SEGC-N
2	SEGB-N
3	SEGA-N
4	SEGF-N
5	SEGE-N
6	SEGD-N
7	+VCC-P
8	SEGH-N
9	SEGG-N

J19 ADDRESS	
PIN	FUNCTION
1	GND-N
2	ADD0-N
3	ADD1-N
4	GND-N
5	ADD2-N
6	ADD3-N
7	GND-N
8	ADD4-N
9	ADD5-N
10	GND-N
11	COLS1-N
12	COLS2-N

J6 RELAY	
PIN	FUNCTION
1	HORNOUT-N
2	AUXOUT-N
3	120SW-P
4	120SW-N

J7 RELAY	
PIN	FUNCTION
1	N/C
2	AUXOUT-N
3	120SW-P
4	120SW-N

0P-1150-0130 UNCOATED OR 0P-1150-0131
COATED 4 COLUMN LED DRIVER II

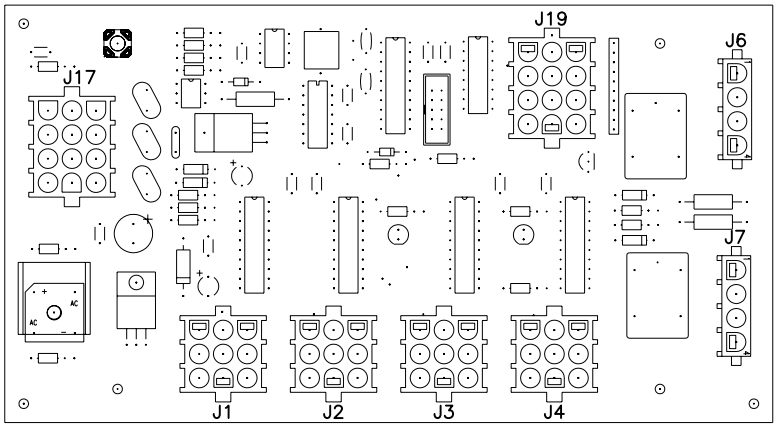

NOTE
-WITH NO ADDRESS PINS SELECTED THE DRIVER WILL DEFAULT TO A/S 4000 PROTOCOL

-COLUMN SELECT PINS WORK FOR EITHER A/S 4000 OR A/S 5000 PROTOCOL

-DRIVER WILL DEFAULT TO COLUMNS 5-8

-GREEN LED INDICATES THE DRIVER HAS POWER

-RED LED WILL BE ON OR BLINKING WHEN THE DRIVER IS RECEIVING SIGNAL

-REDRIVE CIRCUIT IS PROCESSOR REFRESHED (REFER TO DWG A-128429 FOR FURTHER INFORMATION ON THE CURRENT LOOP REDRIVE CIRCUIT SPECIFICATIONS)

	COLUMN SELECT 0 NO JUMPER CONNECTIONS				COLUMN SELECT 1 CONNECT J19 PIN 10 TO 11				COLUMN SELECT 2 CONNECT J19 PIN 10 TO 12				COLUMN SELECT 3 CONNECT J19 10 TO 11&12			
DATA INPUT DIGIT NUMBER	5	6	7	8	1	2	3	4	9	10	11	12	13	14	15	16
DIGIT OUTPUT CONNECTOR	1	2	3	4	1	2	3	4	1	2	3	4	1	2	3	4

ALSO, COLUMN SELECT #1 MAKES THESE CHANGES:
INPUT DATA DIGIT 5, SEGMENT H
IS SENT TO DIGIT OUTPUT NO. 1, SEGMENT H.
INPUT DATA DIGIT 9, SEGMENT H
IS SENT TO DIGIT OUTPUT NO. 2, SEGMENT H.

REV.	DATE	DESCRIPTION	BY	APPR.
3	21 DEC 00	ADDED HORN SEGMENT INFORMATION	EB	
2	2 OCT 00	CHANGED TIME OF DAY ENABLE TO DISABLE (0) AND ENABLE (1)	NSW	
1	29 SEP 00	REMOVED "STAND ALONE" FROM WORDING FOR TIME OF DAY ENABLE.	AVB	

DAKTRONICS, INC. BROOKINGS, SD 57006

PROJ:

TITLE: 4 COLUMN LED DRIVER II; SPECIFICATIONS

DES. BY: EB DRAWN BY: E BRAVEK DATE: 08 NOV 99

REVISION 03 APPR. BY:

SCALE: NONE

1150-R04A-123783

KEY: 0 = WIRE NOT CONNECTED 1 = WIRE IS CONNECTED TO ANY GROUND PIN (1,4,7,10)

J19 ADDRESS AND COLUMN SELECT JACK

SWITCH S1 COLUMN SELECT		OR	JACK J19 COLUMN SELECT	PIN 11	PIN 9	PIN 8	PIN 6
COLUMN 1	0		COLUMN 1	0	0	0	0
COLUMN 2	1		COLUMN 2	0	0	0	1
COLUMN 3	2		COLUMN 3	0	0	1	0
COLUMN 4	3		COLUMN 4	0	0	1	1
COLUMN 5	4		COLUMN 5	0	1	0	0
COLUMN 6	5		COLUMN 6	0	1	0	1
COLUMN 7	6		COLUMN 7	0	1	1	0
COLUMN 8	7		COLUMN 8	0	1	1	1
COLUMN 9	8		COLUMN 9	1	0	0	0
COLUMN 10	9		COLUMN 10	1	0	0	1
COLUMN 11	A		COLUMN 11	1	0	1	0
COLUMN 12	B		COLUMN 12	1	0	1	1
COLUMN 13	C		COLUMN 13	1	1	0	0
COLUMN 14	D		COLUMN 14	1	1	0	1
COLUMN 15	E		COLUMN 15	1	1	1	0
COLUMN 16	F		COLUMN 16	1	1	1	1
				PIN 11	PIN 9	PIN 8	PIN 6

ADDRESS SELECT	PIN 5	PIN 3	PIN 2
12.8K PROTOCOL	0	0	0
19.2K PROTOCOL/1 (220)	0	0	1
NOT USED	0	1	0
NOT USED	0	1	1
NOT USED	1	0	0
NOT USED	1	0	1
NOT USED	1	1	0
UART RELAY EMULATION	1	1	1
	PIN 5	PIN 3	PIN 2

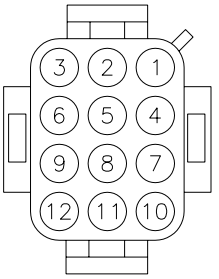

ADDRESS PLUG
WIRE SIDE

WIRING DIAGRAM
ADDRESS PLUG
WITH ALL WIRES
CONNECTED

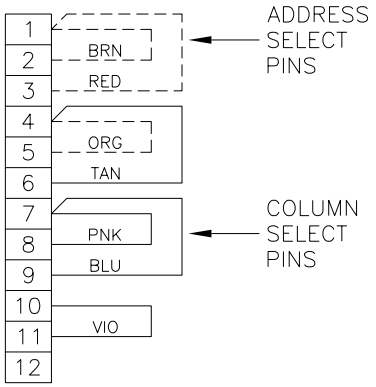

J17 MAIN	
PIN	FUNCTION
1	SIG–P
2	SIG–N
3	GND–N
4	CLOUT–P
5	CLOUT–N
6	16VAC–N
7	GND–N
8	N/C
9	16VAC–P
10	N/C
11	N/C
12	N/C

J10–11	
PIN	FUNCTION
1	NEUT–N
2	NEUT–N
3	HOT–P
4	HOT–P

J1–8	
PIN	FUNCTION
1	NEUT–N
2	HOT–P
3	COM–N
4	NC–P
5	NO–P

J19 ADDRESS	
PIN	FUNCTION
1	GND–N
2	ADD0–N
3	ADD1–N
4	GND–N
5	ADD2–N
6	COLS1–N
7	GND–N
8	COLS2–N
9	COLS3–N
10	GND–N
11	COLS4–N
12	NC

0P–1150–0097 CL INPUT OR 0P–1150–0101 FIBER OPTIC INPUT RELAY DRIVER II

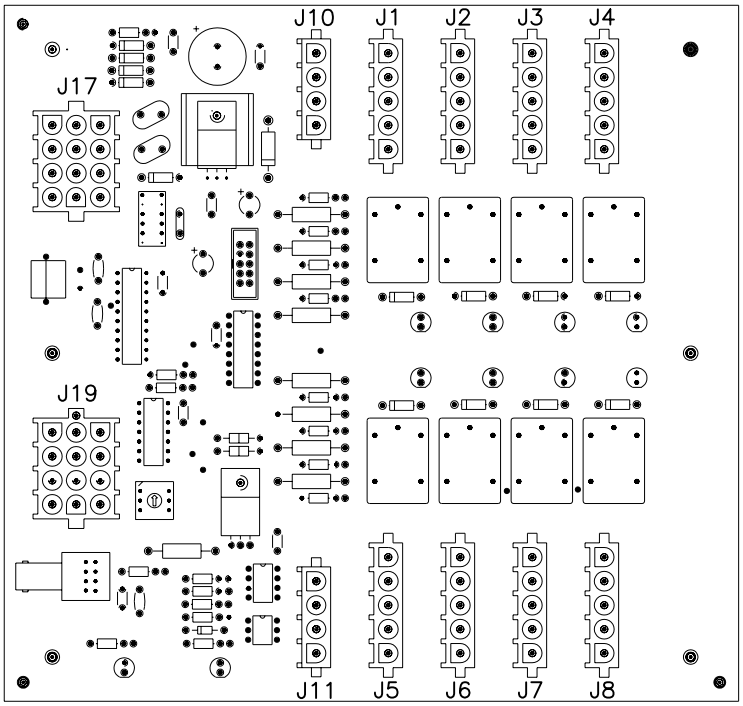

NOTES

–WITH NO ADDRESS PINS SELECTED THE DRIVER WILL DEFAULT TO 12.8K PROTOCOL

–COLUMN SELECT WORKS FOR EITHER 12.8K OR 19.2K PROTOCOL

–# (###) THE NUMBER IN PARENTHESIS IS THE ADDRESS OF THE DATA RECEIVED FROM THE A/S 5000 SERIES CONSOLE
–# (###) THE NUMBER BEFORE THE PARENTHESIS IS THE PHYSICAL ADDRESS SET BY THE JUMPERS ON THE J19 ADDRESS PINS

–DRIVER DEFAULT IS COLUMN 1

–GREEN LED INDICATES THE DRIVER HAS POWER.

–RED LED WILL BE ON OR BLINKING WHEN THE CARD IS RECEIVING SIGNAL.

–REDRIVE CIRCUIT IS PROCESSOR REFRESHED (REFER TO DWG A–128429 FOR FURTHER INFORMATION ON THE CURRENT LOOP REDRIVE CIRCUIT SPECIFICATIONS)

REV.	DATE	DESCRIPTION	BY	APPR.
1	2 OCT 00	UPDATED NOTES SECTION	NSW	

DAKTRONICS, INC. BROOKINGS, SD 57006

PROJ:

TITLE: RELAY DRIVER; SPECIFICATIONS

DES. BY: EB DRAWN BY: E BRAVEK DATE: 08 NOV 99

REVISION 01 APPR. BY:

SCALE: NONE

1150-R04A-123791

KEY: 0 = WIRE NOT CONNECTED 1 = WIRE IS CONNECTED TO ANY GROUND PIN (4,7,10)

J4 ADDRESS AND NAME SWAP SELECT JACK

SEE NOTE BELOW →

DECIMAL ADDRESS	PIN 9	PIN 8	PIN 6	PIN 5
1 (221)	0	0	0	1
2 (222)	0	0	1	0
3 (223)	0	0	1	1
4 (224)	0	1	0	0
5 (225)	0	1	0	1
6 (226)	0	1	1	0
7	0	1	1	1
8	1	0	0	0
9	1	0	0	1
10	1	0	1	0
11	1	0	1	1
12	1	1	0	0
13	1	1	0	1
14	1	1	1	0
15	1	1	1	1

NAME SELECT	PIN 11
BOTH HOME & GUEST	0
HOME/GUEST ONLY	1

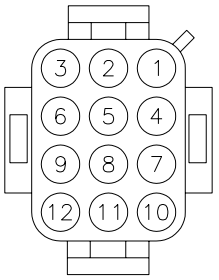

ADDRESS PLUG
WIRE SIDE

WIRING DIAGRAM
ADDRESS PLUG WITH ALL WIRES CONNECTED

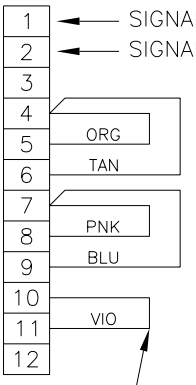

TEAM NAME SWAP PINS 10−11

OP−1176−0011; 1 1/2" & 2 1/2"
OUTDOOR TEAM NAME MESSAGE CENTER SHIFT CARD

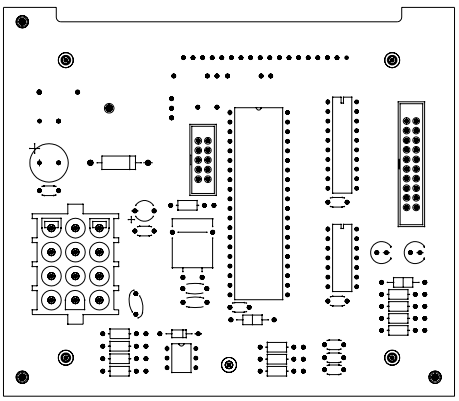

OP−1150−0132; 1" & 3/4"
INDOOR INCANDESCENT AND LED TEAM NAME MESSAGE, CENTER SHIFT CARD

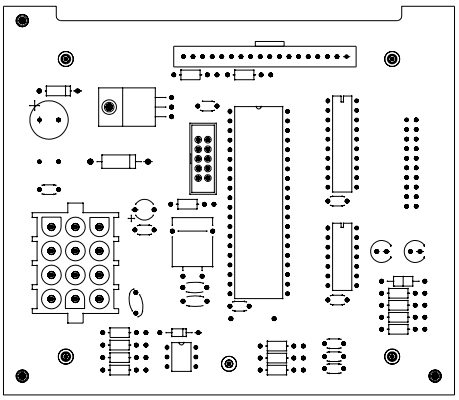

NOTES

−WITH NO ADDRESS PINS SELECTED THE TNMC SHIFT CARD WILL DEFAULT TO A/S 4000 PROTOCOL

−NAME SWAP PIN WORKS FOR EITHER A/S 4000 OR A/S 5000 PROTOCOL

−# (###) THE NUMBER IN PARENTHESIS IS THE ADDRESS OF THE DATA RECEIVED FROM THE A/S 5000 SERIES CONSOLE
−# (###) THE NUMBER BEFORE THE PARENTHESIS IS THE PHYSICAL ADDRESS SET BY THE JUMPERS ON THE J4 ADDRESS PINS

−CARD RECEIVES POWER FROM THE MODULE THAT IT IS PLUGGED INTO.

−GREEN LED INDICATES THAT THE CARD HAS POWER

−RED LED WILL BE ON OR BLINKING WHEN THE CARD IS RECEIVING SIGNAL.

−OP−1176−0011, OUTDOOR TEAM NAME CARD SHIFTS FROM LEFT TO RIGHT (HOME SIDE TO GUEST SIDE) NAME SWAP PIN CHANGES CARD FROM DEFAULTING TO HOME TO DEFAULTING TO GUEST SIDE DATA.

−OP−1150−0132, INDOOR TEAM NAME CARD SHIFTS FROM RIGHT TO LEFT (GUEST SIDE TO HOME SIDE), NAME SWAP PIN CHANGES CARD FROM DEFAULTING TO GUEST TO DEFAULTING TO HOME SIDE DATA.

REV.	DATE	DESCRIPTION	BY	APPR.
01	2 OCT 00	EDITED TEXT "HOME ONLY" TO "HOME/GUEST ONLY"	NSW	

DAKTRONICS, INC. BROOKINGS, SD 57006

PROJ:

TITLE: A/S 5000 CAPABLE TNMC SHIFT CARD; SPECIFICATIONS

DES. BY: EB DRAWN BY: E BRAVEK DATE: 08 NOV 99

REVISION 01 APPR. BY:

SCALE: NONE

1150-R04A-123794

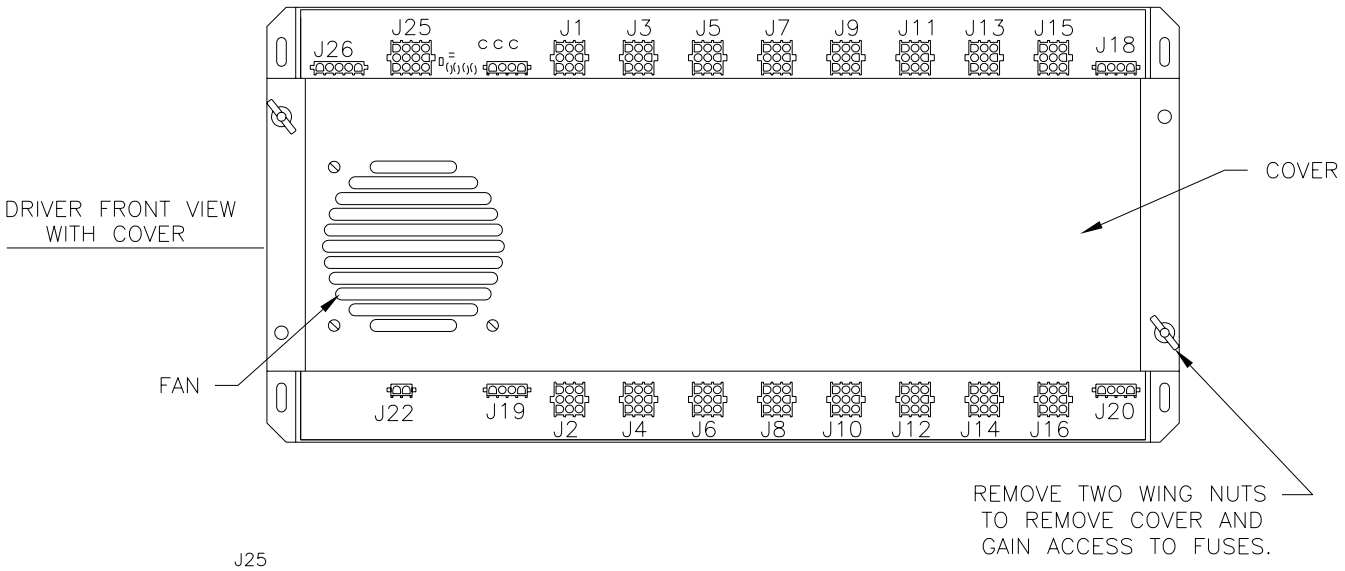

J25

PIN	FUNCTION	PIN	FUNCTION
1	GND	7	GND
2	ADDR 0 –	8	ADDR 4 –
3	ADDR 1 –	9	ADDR 5 –
4	GND	10	GND
5	ADDR 2 –	11	ADDR 6 –
6	ADDR 3 –	12	CLMN SWAP

DS1–RX
DS2–PWR
DS3–STATUS

J1 – J16

PIN	FUNCTION
1	SEG C
2	SEG B
3	SEG A
4	SEG F
5	SEG E
6	SEG D
7	COMMON
8	SEG H
9	SEG G

J17

PIN	FUNCTION
1	SIG IN +
2	SIG IN –
3	SIG OUT +
4	SIG OUT –

J18

PIN	FUNCTION
1	LAMP NEUT
2	LAMP NEUT
3	LAMP HOT 1, 3, 5, 7
4	LAMP HOT 2, 4, 6, 8

J26

PIN	FUNCTION
1	GND
2	PROT 0 –
3	PROT 1 –
4	PROT 2 –
5	TOD–N

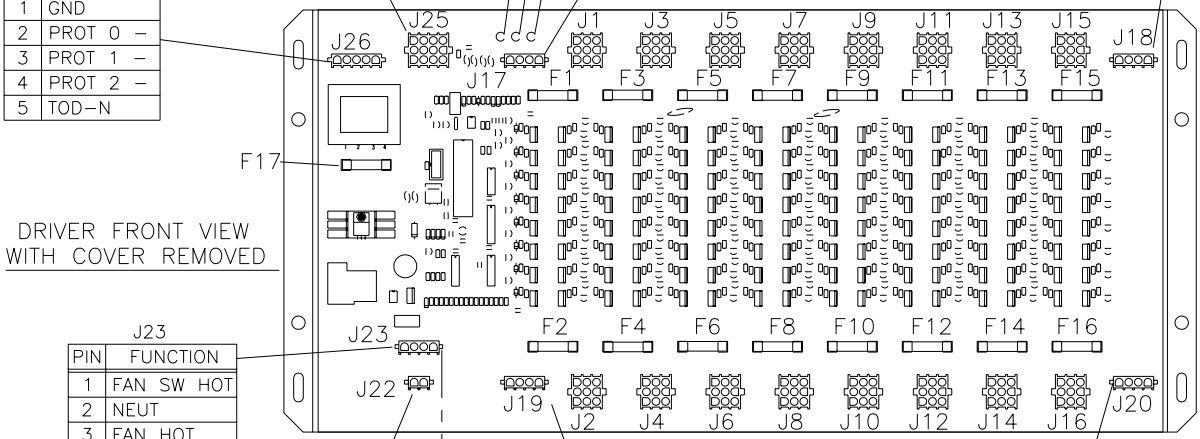

J23

PIN	FUNCTION
1	FAN SW HOT
2	NEUT
3	FAN HOT
4	NEUT

J22

PIN	FUNCTION
1	NORM OPEN
2	COMMON

PLUG FROM FAN IN COVER
CONNECTS TO J23

J19

PIN	FUNCTION
1	NEUTRAL
2	NEUTRAL
3	120V HOT
4	120V HOT

J20

PIN	FUNCTION
1	LAMP NEUT
2	LAMP NEUT
3	LAMP HOT 9,11,13,15
4	LAMP HOT 10,12,14,16

F1 THRU F16 ARE TYPE AGC–10, DAKTRONICS PART NUMBER F–1006.
F17 ARE TYPE AGC–1/2, DAKTRONICS PART NUMBER F–1000

REV.	DATE	DESCRIPTION	BY	APPR.
5	17 JAN 02	CHANGED ADD 7 TO CLMN SWAP ON J25	JJS	
4	2 OCT 00	CHANGED J25 & J26 TEXT –5 V TO GND	NSW	
3	29 SEP 00	CORRECTED J25 TABLE. CHANGED J26 TABLE PIN 5 FROM PROT 3 TO T.O.D.	AVB	
2	2 JUNE 00	CORRECTED J26 PINOUT TABLE	EB	

DAKTRONICS, INC. BROOKINGS, SD 57006

PROJ:

TITLE: LAYOUT; 16 COLUMN DRIVER III

DES. BY: EB DRAWN BY: EB DATE: 11 NOV 99

REVISION APPR. BY:

SCALE: 1=5

1033-R04A-123940

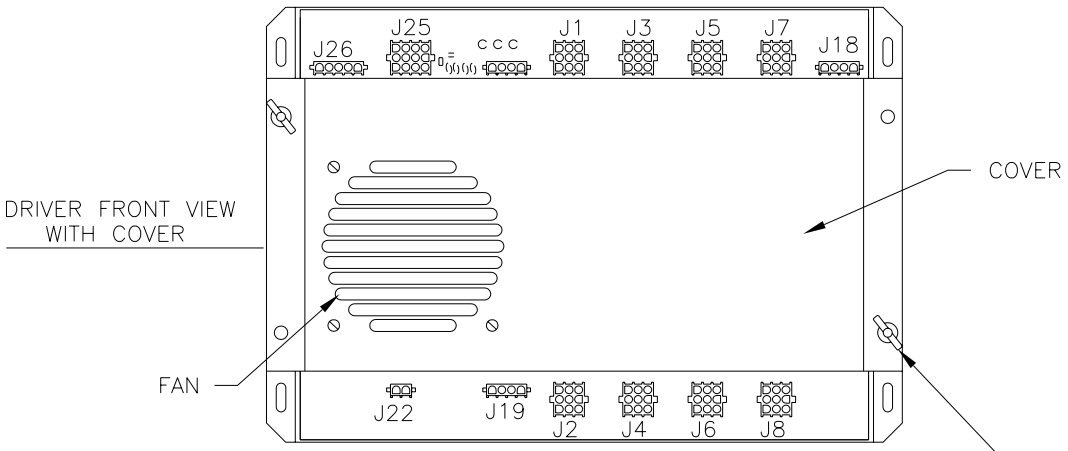

J25

PIN	FUNCTION	PIN	FUNCTION
1	GND	7	GND
2	ADDR 0 –	8	ADDR 4 –
3	ADDR 1 –	9	ADDR 5 –
4	GND	10	GND
5	ADDR 2 –	11	ADDR 6 –
6	ADDR 3 –	12	CLMN SWAP

DS1–RX
DS2–PWR
DS3–STATUS

J1 – J8

PIN	FUNCTION
1	SEG C
2	SEG B
3	SEG A
4	SEG F
5	SEG E
6	SEG D
7	COMMON
8	SEG H
9	SEG G

J17

PIN	FUNCTION
1	SIG IN +
2	SIG IN –
3	SIG OUT +
4	SIG OUT –

J26

PIN	FUNCTION
1	GND
2	PROT 0 –
3	PROT 1 –
4	PROT 2 –
5	TOD–N

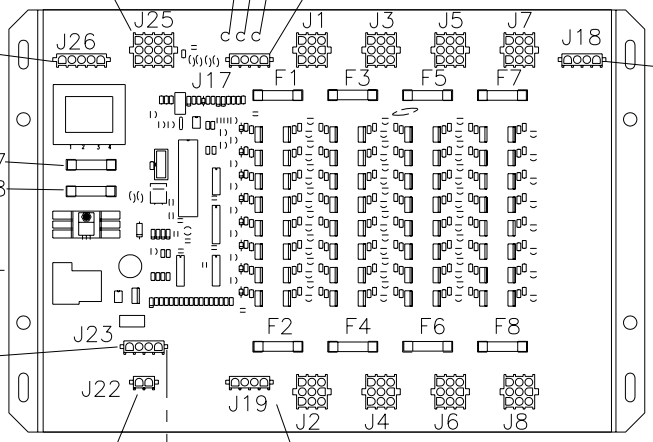

DRIVER FRONT VIEW
WITH COVER REMOVED

J18

PIN	FUNCTION
1	LAMP NEUT
2	LAMP NEUT
3	LAMP HOT 1, 3, 5, 7
4	LAMP HOT 2, 4, 6, 8

J23

PIN	FUNCTION
1	FAN SW HOT
2	NEUT
3	FAN HOT
4	NEUT

J22

PIN	FUNCTION
1	NORM OPEN
2	COMMON

PLUG FROM FAN IN COVER
CONNECTS TO J23

J19

PIN	FUNCTION
1	NEUTRAL
2	NEUTRAL
3	120V HOT
4	120V HOT

F1 THRU F8 ARE TYPE AGC–10, DAKTRONICS PART NUMBER F–1006.
F17 THRU F18 ARE TYPE AGC–1/2, DAKTRONICS PART NUMBER F–1000

REV.	DATE	DESCRIPTION	BY	APPR.
4	2 OCT 00	CHANGED J25 & J26 TEXT –5 V TO GND	NSW	
3	29 SEP 00	CORRECTED J25 TABLE. CHANGED J26 TABLE PIN 5 FROM PROT 3 TO T.O.D.	AVB	
2	2 JUNE 00	CORRECTED J26 PINOUT TABLE	EB	
1	30 NOV 99	REMOVED DIMMING HEADER AND TABLE	EB	

DAKTRONICS, INC. BROOKINGS, SD 57006

PROJ:

TITLE: LAYOUT; 8 COLUMN DRIVER III

DES. BY: EB DRAWN BY: EB DATE: 11 NOV 99

REVISION APPR. BY:

SCALE: 1=5

1033-R04A-123941

RECOMMENDED MAXIMUM CABLE LENGTH WITH ONE RUN AS SHOWN = 2000'

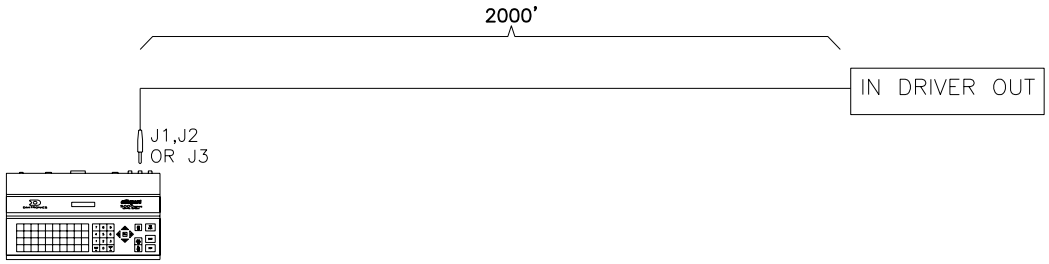

RECOMMENDED MAXIMUM CABLE LENGTH WITH COMBINATION OF TWO RUNS
FROM EITHER THE ALL SPORT 5000 OUTPUT OR DRIVER REDRIVE CIRCUIT AS SHOWN = 2000'

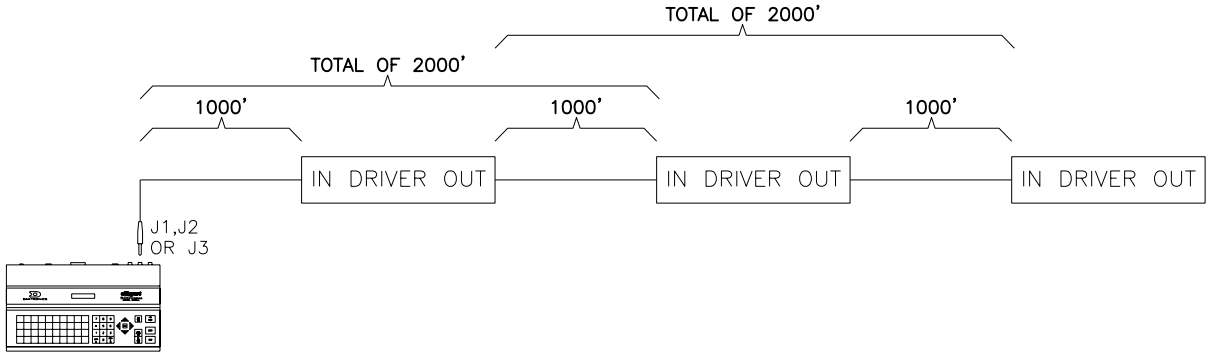

RECOMMENDED MAXIMUM PARALLEL LOADS ON REDRIVE CIRCUIT OR ALL SPORT 5000 OUTPUT = 5 PARALLEL LOADS

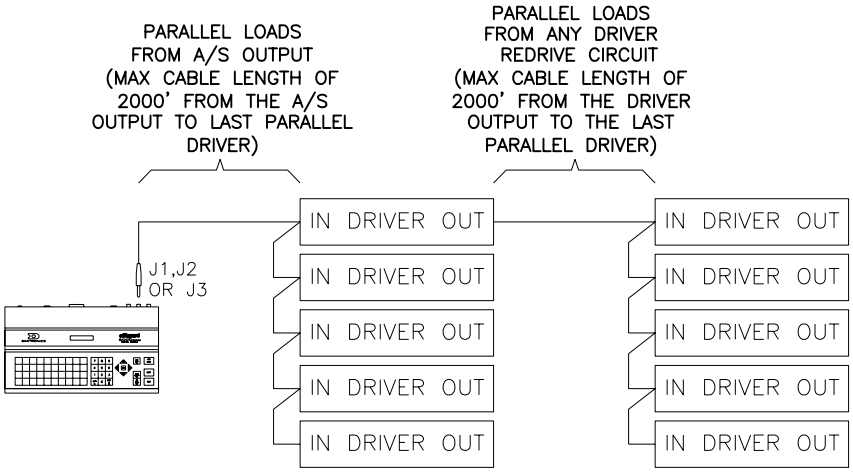

RECOMMENDED MAXIMUM REDRIVES = 10 REDRIVES FOR ANY DRIVER

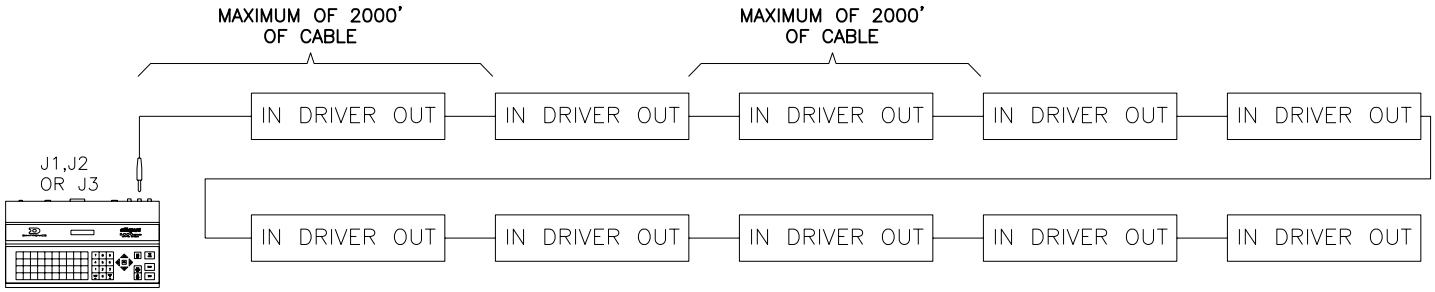

REV.	DATE	DESCRIPTION	BY	APPR.

DAKTRONICS, INC. BROOKINGS, SD 57006

PROJ:

TITLE: ALL SPORT 5000 CURRENT LOOP OUTPUT SPECIFICATIONS

DES. BY: EB DRAWN BY: EBRAVEK DATE: 26 FEB 00

REVISION 00 APPR. BY:

SCALE: NONE

1196-R04A-128429

OP-1150-0126 UNCOATED OR 0P-1150-0127 COATED
16 COLUMN LED DRIVER II

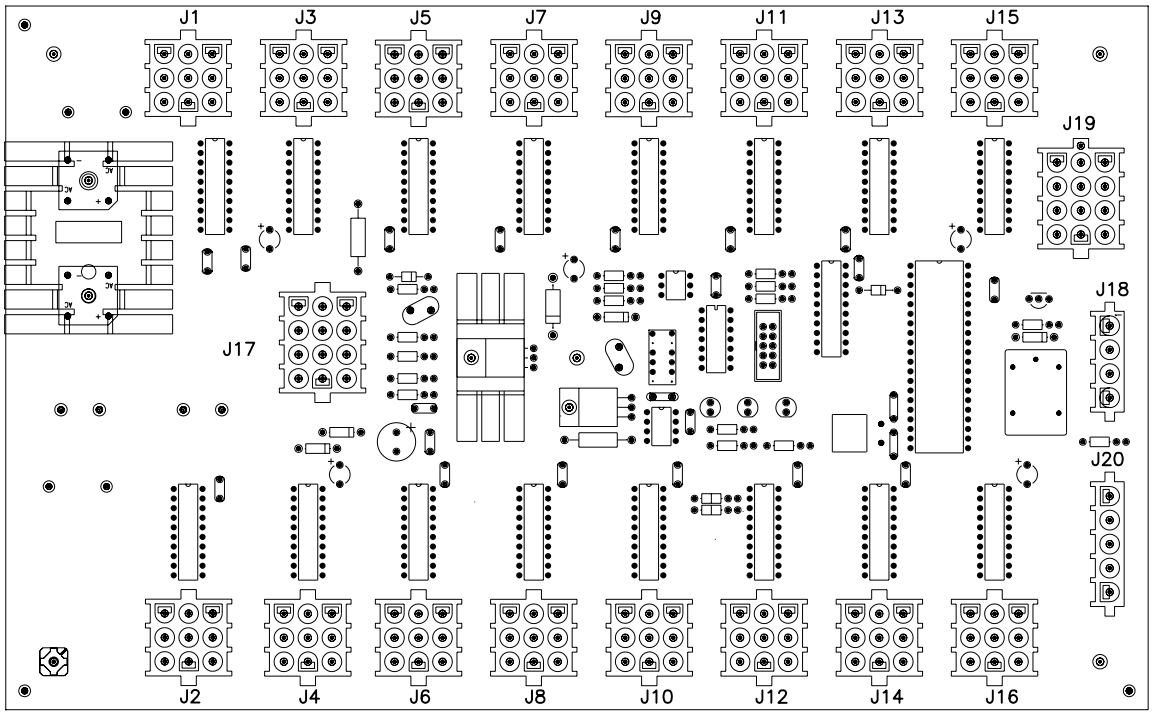

J17 MAIN	
PIN	FUNCTION
1	SIG-P
2	SIG-N
3	SIG2-P
4	CLOUT-P
5	CLOUT-N
6	16VAC-N
7	GND-N
8	EARTH-N
9	16VAC-P
10	GND-N
11	+VDD-P
12	+VBB-P

J1-16 DIGIT	
PIN	FUNCTION
1	SEGC-N
2	SEGB-N
3	SEGA-N
4	SEGF-N
5	SEGE-N
6	SEGD-N
7	+VCC-P
8	SEGH-N
9	SEGG-N

J19 ADDRESS	
PIN	FUNCTION
1	GND-N
2	ADD0-N
3	ADD1-N
4	GND-N
5	ADD2-N
6	ADD3-N
7	GND-N
8	ADD4-N
9	ADD5-N
10	GND-N
11	ADD6-N
12	ADD7-N

J18 RELAY	
PIN	FUNCTION
1	HORNOUT-N
2	AUXOUT-N
3	120SW-P
4	120SW-N

J20 PROTOCOL	
PIN	FUNCTION
1	GND-N
2	PR0-N
3	PR1-N
4	PR2-N
5	TOD-N

NOTE
-WITH NO ADDRESS PINS SELECTED THE DRIVER WILL DEFAULT TO A/S 4000 PROTOCOL

-GREEN LED INDICATES THE DRIVER HAS POWER

-RED LED WILL BE ON OR BLINKING WHEN THE DRIVER IS RECEIVING SIGNAL

-AMBER LED INDICATES LED DRIVER STATUS, LED WILL BE BLINKING TO INDICATE THAT THE DRIVER IS RUNNING, IF THE LED IS OFF OR ON SOLID ALL OF THE TIME, THEN THE DRIVERS CPU IS NOT FUNCTIONING AND MAY NEED TO BE RESET OR REPLACED.

-REFER TO DRAWINGS A-115078 & A-115079 FOR J19 ADDRESS SETTINGS FOR THIS DRIVER.

-REFER TO DRAWING A-115081 FOR J20 PROTOCOL SETTINGS FOR THIS DRIVER.

-REDRIVE CIRCUIT IS PROCESSOR REFRESHED (REFER TO DWG A-128429 FOR FURTHER INFORMATION ON THE CURRENT LOOP REDRIVE CIRCUIT SPECIFICATIONS)

REV.	DATE	DESCRIPTION	BY	APPR.
01	2 OCT 00	UPDATED NOTES SECTION	NSW	

DAKTRONICS, INC. BROOKINGS, SD 57006

PROJ:

TITLE: 16 COLUMN LED DRIVER II SPECIFICATIONS

DES. BY: EB DRAWN BY: EBRAVEK DATE: 11 JAN 00

REVISION 01 APPR. BY: SCALE: 1=2

1150-R07A-126174

KEY: 0 = WIRE NOT CONNECTED 1 = WIRE IS CONNECTED TO ANY GROUND PIN (1,4,7,10)

J19 ADDRESS AND COLUMN SELECT JACK

DECIMAL ADDRESS	PIN 9	PIN 8	PIN 6	PIN 5	PIN 3	PIN 2
1	0	0	0	0	0	1
2	0	0	0	0	1	0
3	0	0	0	0	1	1
4	0	0	0	1	0	0
5	0	0	0	1	0	1
6	0	0	0	1	1	0
7	0	0	0	1	1	1
8	0	0	1	0	0	0
9	0	0	1	0	0	1
10	0	0	1	0	1	0
11	0	0	1	0	1	1
12	0	0	1	1	0	0
13	0	0	1	1	0	1
14	0	0	1	1	1	0
15	0	0	1	1	1	1
16	0	1	0	0	0	0
17	0	1	0	0	0	1
18	0	1	0	0	1	0
19	0	1	0	0	1	1
20	0	1	0	1	0	0
21	0	1	0	1	0	1
22	0	1	0	1	1	0
23	0	1	0	1	1	1
24	0	1	1	0	0	0
25	0	1	1	0	0	1
26	0	1	1	0	1	0
27	0	1	1	0	1	1
28	0	1	1	1	0	0
29	0	1	1	1	0	1
30	0	1	1	1	1	0
31	0	1	1	1	1	1
32	1	0	0	0	0	0
33	1	0	0	0	0	1
34	1	0	0	0	1	0
35	1	0	0	0	1	1
36	1	0	0	1	0	0
37	1	0	0	1	0	1
38	1	0	0	1	1	0
39	1	0	0	1	1	1
40	1	0	1	0	0	0
41	1	0	1	0	0	1
42	1	0	1	0	1	0
43	1	0	1	0	1	1
44	1	0	1	1	0	0
45	1	0	1	1	0	1
46	1	0	1	1	1	0
47	1	0	1	1	1	1
48	1	1	0	0	0	0
49	1	1	0	0	0	1
50	1	1	0	0	1	0
51	1	1	0	0	1	1
52	1	1	0	1	0	0
53	1	1	0	1	0	1
54	1	1	0	1	1	0
55	1	1	0	1	1	1
56	1	1	1	0	0	0
57	1	1	1	0	0	1
58	1	1	1	0	1	0
59	1	1	1	0	1	1
60	1	1	1	1	0	0
61	1	1	1	1	0	1
62	1	1	1	1	1	0
63	1	1	1	1	1	1

PROTOCOL SELECT

	PIN 12	PIN 11
1	0	1
2	1	0
3	1	1

DS1– POWER (GREEN)
DS2– CHARGE (RED)
DS3– VBB LOW (RED)
DS4– OPERATE (AMBER)

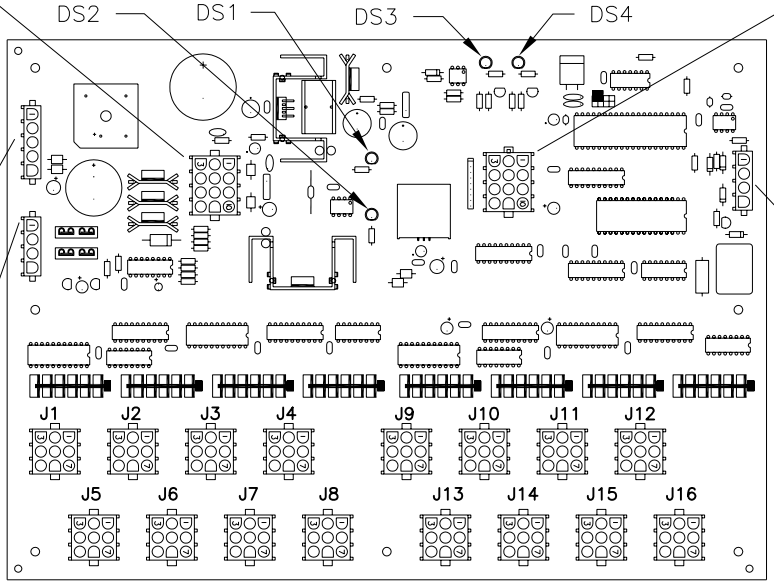

J17

FUNCTION	PIN
CL SIG–P	1
CL SIG–N	2
GND–N	3
CL OUT–P	4
CL OUT–N	5
POWER SW–P	6
+12CONS–P	7
GNDCONS–N	8
POWER SW–N	9
485 SIG–P	10
485 SIG–N	11
GND–N	12

J19

FUNCTION	PIN
GND–N	1
ADD0–N	2
ADD1–N	3
GND–N	4
ADD2–N	5
ADD3–N	6
GND–N	7
ADD4–N	8
ADD5–N	9
GND–N	10
PR0–N	11
PR1–N	12

J21

FUNCTION	PIN
12.6VAC–P	1
N/C	2
12.6VAC–N	3
+12HORN–P	4
GNDHORN–N	5

J18

FUNCTION	PIN
SW–P	1
SROW–P	2
SW–N	3
COL–N	4

J20

FUNCTION	PIN
INTBATT–P	1
INTBATT–N	2
EXTBATT–P	3
EXTBATT–N	4

JUMPER	FUNCTION
W1	TEST
W2	BAUD RATE
W3	
W4	INVERT
W5	RS–485
W6	CURRENT LOOP

NOTE
–WITH NO ADDRESS OR PROTOCOL PINS SELECTED THE DRIVER WILL DEFAULT TO A/S 4000 PROTOCOL

–WITH ADDRESS PINS ONLY THE DRIVER WILL DEFAULT TO A/S 5000 PROTOCOL.

–GREEN LED INDICATES THE DRIVER HAS POWER

–AMBER LED INDICATES DRIVER STATUS. LED WILL BE BLINKING IF DRIVER IS RUNNING.

REV.	DATE	DESCRIPTION	BY	APPR.
1	12 APR 01	CHANGED ADD1–0 TO ADD1–N ON J–19	NW	

DAKTRONICS, INC. BROOKINGS, SD 57006

PROJ:

TITLE: DRIVER; CL, 16 DIGIT W/CHARGER

DES. BY: DRAWN BY: NWRIEDT DATE: 09 MAR 01

REVISION APPR. BY:

SCALE: NONE

1066-R04A-145791

LED DRIVER IV
0P-1192-0383, 16 COL
0P-1192-0384, 16 COL, AC

J1-16 DIGIT JACKS

PIN	FUNCTION
1	SEGC-N
2	SEGB-N
3	SEGA-N
4	SEGF-N
5	SEGE-N
6	SEGD-N
7	+VBB-P
8	SEGH-N
9	SEGG-N

J17 PWR/SIG

PIN	FUNCTION
1	SIG-P
2	SIG-N (232-IN)
3	SIG 2-P(232-GND)
4	CLOUT-P
5	CLOUT-N
6	16VAC-N
7	GND-N
8	EARTH-N
9	16VAC-P
10	GND-N
11	+VDD-P
12	+VBB-P

J22 RC-100 RADIO

PIN	FUNCTION
1	+UNREG-P
2	GND-N
3	GND-N
4	RX_INPUT-P

J21 2.4GHz RADIO

PIN	FUNCTION
1	+UNREG-P
2	GND-N
3	GND-N
4	RX_INPUT-P

J23 PROGRAM

PIN	FUNCTION
1	DATA
2	/RESET
3	N/C
4	GND-N
5	CLK
6	GND-N
7	N/C
8	+5V-P
9	N/C
10	+5V-P

REFER TO DWGS
A-115078 & A-115079
FOR ADDRESS SETTINGS

J19 ADDRESS

PIN	FUNCTION
1	GND-N
2	ADD0-N
3	ADD1-N
4	GND-N
5	ADD2-N
6	ADD3-N
7	GND-N
8	ADD4-N
9	ADD5-N
10	GND-N
11	ADD6-N
12	ADD7-N

REFER TO DWGS
A-290261 & A-290689

S1 ADDRESS DIP SWITCH PACKAGE

SW #	FUNCTION
1	ADD0
2	ADD1
3	ADD2
4	ADD3
5	ADD4
6	ADD5
7	ADD6
8	ADD7

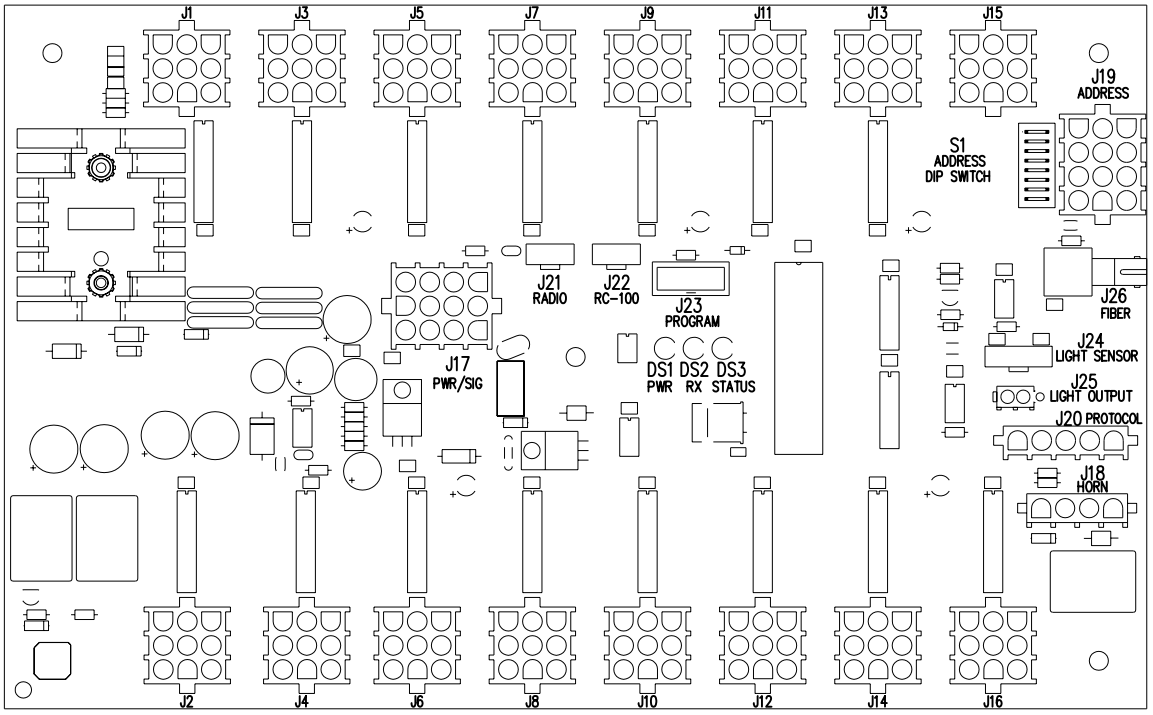

J26 FIBER RX

PIN	FUNCTION
1	N/C
2	+5V-P
3	GND-N
4	N/C
5	N/C
6	RX_INPUT-P
7	GND-N
8	N/C

J24 LIGHT SENSOR

PIN	FUNCTION
1	LIGHT_IN-P
2	LIGHT_IN-N
3	+5V-P
4	GND-N
5	GND-N
6	N/C

J25 LIGHT OUT- NEXT DRIVER

PIN	FUNCTION
1	LIGHT_OUT-P
2	LIGHT_OUT-N

REFER TO DWG A-115081
FOR PROTOCAL SETTINGS

J20 PROTOCOL

PIN	FUNCTION
1	GND-N
2	PR0-N
3	PR1-N
4	PR2-N
5	PR3-N (TOD)

J18 HORN

PIN	FUNCTION
1	HORNOUT-N
2	AUXOUT-N
3	120SW-P
4	120SW-N

NOTES:

-WITH NO ADDRESS SELECTED, DRIVER WILL DEFAULT TO A/S 4000 PROTOCOL.
-GREEN LED DS1 INDICATES THAT THE DRIVER HAS POWER.
-RED LED DS2 WILL FLICKER WHEN THE DRIVER RECEIVES SIGNAL.
-AMBER LED DS3 WILL BLINK WHEN THE DRIVER IS RUNNING.
-IF DS3 IS ON OR OFF CONTINUOUSLY THE MICROCONTROLLER IS NOT WORKING.
-REFER TO DRAWING A-128429 FOR CURRENT LOOP REDRIVE SPECIFICATIONS.
-REFER TO DRAWING A-115081 FOR J20 PROTOCOL SETTINGS.
-REFER TO DRAWINGS A-115078,115079 FOR J19 ADDRESS SETTINGS.

THE CONCEPTS EXPRESSED AND DETAILS SHOWN ON THIS DRAWING ARE CONFIDENTIAL AND PROPRIETARY. DO NOT REPRODUCE BY ANY MEANS, INCLUDING ELECTRONICALLY WITHOUT THE EXPRESSED WRITTEN CONSENT OF DAKTRONICS, INC. COPYRIGHT 2006 DAKTRONICS, INC.

DAKTRONICS, INC. BROOKINGS, SD 57006

REV.	DATE	DESCRIPTION	BY	APPR.
02	30 NOV 06	ADDED ADDRESS SWITCH S1 TO DRAWING	DJU	
01	26 OCT 06	RESIZED TEXT SO THAT IT WAS EASIER TO READ, AND CLARIFIED FUNCTIONS OF EACH JACK.	AFL	

PROJ:
TITLE: SPECIFICATIONS; LED DRIVER IV, 16 COL
DES. BY: DRAWN BY: DULSCHM DATE: 09 OCT 06
REVISION 02 APPR. BY:
SCALE: 1 = 2

1192-R04A-288137

Appendix D: Quick Reference

All Sport 5000® Standard Keys

Note: Refer to **Section 2.6 Standard Keys** for more detailed operating instructions**.**

Start/Stop Clock

- **<START>** and **<STOP>** control the function of the main clock. The green LED on the **<START>** button is illuminated when the clock is running.

Horn

- **<HORN>** sounds the main horn. The horn sounds for as long as the horn key is pressed.
- **<AUTO HORN>** sets the horn to automatically sound when a period end is reached. The yellow LED on the **<HORN>** is illuminated when the auto horn setting is **ON**.

Clock Direction

- **<COUNT UP/DOWN>** sets the direction of the main clock. The clock direction is shown in the upper right corner of the LCD.
- This key is disabled while the clock is running.

Set Main Clock

- The first press of the **<SET MAIN CLOCK>** edits the current main clock value.
- Press the **<SET MAIN CLOCK>** repetitively to edit the configured period, break, and overtime length.
- Press **<ENTER>** at any of the displayed clock values to load that value into the main clock.
- This key is disabled while the clock is running.

Edit Key

- **<EDIT>** is used to edit sport values. Press **<EDIT>** followed by the desired score or other data to be edited. Refer to the specific sport documentation for the edit key function.

All Sport 5000® Segment Timer

Note: Refer to **Section: 3 Segment Timer Operation** for more detailed operating instructions**.**

First and Last Segment

- **<FIRST SEGMENT>** and **<LAST SEGMENT>** set the range of segments to be used.

Auto Stop

- **<AUTO STOP>** sets the console to stop at the end of each segment or at the end of the last segment.

Current Segment

- **<CURRENT SEGMENT+1>** increments the current segment value

Reset

- **<RESET CURRENT SEGMENT>** sets the segment time to the current segment value and stops the clock.
- **<RESET TO FIRST SEG>** sets the segment number and time to the value of the first segment This key is disabled while the clock is running.

Interval

- **<INTERVAL TIME>** sets the interval time.
- **<DISPLAY INTERVAL>** sets the console to display interval time between segments.

Segment Time Editing

- **<SEG. NO. TIME>** allows the time for a specified segment to be edited. Once the segment time is edited, pressing the up or down arrow key scrolls through the segment times and allows any other segments to be edited.
- **<COPY RANGE>** copies a time value to a range of segments.

Edit Key Function

- Press **<EDIT>** followed by **<CURRENT SEGMENT+1>** to edit the current segment value.

All Sport 5000® Baseball

Note: Refer to **Section 4: Baseball Operation** for more detailed operating instructions**.**

Start-Up

- Turn the Power Switch **ON**.
- At the **Resume Game? Y/N** prompt:
  - Press **<ENTER /YES>** to resume the game where last shut off.

or

  - Press **<Clear/NO>** to enter a new sport code number.

At Bat

- **<AT BAT>** turns the at bat indicators on or off.

Batter Number

- **<BATTER>** edits the current batter number.

Batter Average

- **<AVERAGE>** edits the current batter average.

Inning Number

- **<INNING+1>** increments the current inning number.

Outs

- **<OUTS+1>** increments the out number for the current team at bat.

Ball and Strike Count

- **<BALL COUNT+1>** and **<STRIKE COUNT+1>** increment the count for the current batter.
- **<CLEAR COUNT>** clears the count.
- To increment the ball and strike count for the pitcher automatically with **<BALL COUNT+1>** and **<STRIKE COUNT+1>**, use the **Auto Increment Pitches** setting in the **Menu** under **Edit Settings**.

Pitch Count Balls, Pitch Count Strikes, Foul Balls, Inplay

- **<PITCH COUNT STRIKES+1>**, **<PITCH COUNT BALLS+1>**, **<FOUL BALLS+1>** and **<INPLAY+1>** keys increment the total of each type of pitch for the respective team pitcher.
- These keys **DO NOT** increment the ball and strike count. See **Ball and Strike Count** above.
- **<CLEAR PITCH COUNT>** will clear all pitch count types for the respective team's pitcher.
- To increment the ball and strike count for the pitcher automatically with **<BALL COUNT+1>** and **<STRIKE COUNT+1>**, use the **Auto Increment Pitches** setting in the **Menu** under **Edit Settings**.

Hit and Error Indicators/Digits

- **<HIT>** or **<ERROR>** turn on or off their respective scoreboard indicators.
- The **<ERROR>** key may also prompt for an error position depending on the **Error Position** setting
- The total Team Hits and Errors are modified using the **<HITS+1>** and **<ERRORS+1>** keys. See **Team Hits, Errors, Left On Base** below.

Team Hits, Errors, Left On Base

- **<HITS+1>**, **<ERRORS+1>**, **<LEFT ON BASE+1>** increment their respective team totals.

Team Runs

- **<RUNS+1>** increments team runs.
- Team Runs are scored by total or by inning depending on the **Score by Inning** setting.

Edit Key Function

- Press **<EDIT>** followed by any of the following keys to edit their respective values.
  <RUNS+1>, <INNING+1>, <OUTS+1>, <HITS+1>, <ERRORS+1>, <LEFT ON BASE+1>, <PITCH COUNT STRIKES+1>, <PITCH COUNT BALLS+1>, <FOUL BALLS+1>, <INPLAY+1>

All Sport 5000® Basketball

Note: Refer to **Section 7: Basketball Operation** for more detailed operating instructions**.**

Start-Up

- Turn the Power Switch **ON**.
- At the **Resume Game? Y/N** prompt:
  - Press **<ENTER /YES>** to resume the game where last shut off.

or

  - Press **<Clear/NO>** to enter a new sport code number.

Team Score

- **<SCORE+1>, <SCORE+2>, <SCORE+3>** and **<SCORE-1>** increment and decrement the team score.
- The console may ask for a player number depending on the setting of **Team Score – Update Player** in the **Menu** under **Edit Settings.**

Team Fouls

- **<TEAM FOULS+1>** and **<TEAM FOULS-1>** increment and decrement the total team fouls.
- **<BLANK PLAYER FOUL>** blanks the displayed player-foul digits.
- The console may ask for a player number depending on the setting of **Team Score – Update Player** in the **Menu** under **Edit Settings.**

Time Out

- **<TIME OUT>** displays the number of full (1st press) or partial (2nd press) timeouts (if applicable.) Press enter to take a time out for the selected team.
- **<TIME OUT ON/OFF>** selects a full (1st press) or partial (2nd press) time out and starts the time out clock.
- The time out clock may be displayed on the main scoreboard depending on the **Time Outs – Show on Main** setting in the **Menu** under **Edit Settings**.

Possession

- **<POSS>** turns the possession indicators on or off for the respective team.

Bonus

- **<BONUS>** turns the 1-on-1 bonus indicators or 2-shot bonus indicators on or off.

Period

- **<PERIOD+1>** increments the period value.

Shot Clock Time

- **<SET SHOT TIME>** changes the current value of the shot clock timer. Pressing **<SET SHOT TIME>** a second time allows the reset value of the shot clock timer to be edited.

Player Roster Keys

- **<PLAYER>** selects the player number for statistics edit. Pressing **<IN GAME>** or **<OUT OF GAME>** within the player statistics edit screen changes the status of the player selected. Press the arrow keys to edit the foul or points values for the chosen player. Press the up or down arrow keys to move to a different player.
- **<DELETE PLAYER>** deletes the selected player from the roster.

Player Substitution

- **<INDIV. SUB>** substitutes a player currently out of the game for a player who is in the game.
- **<MASS SUB>** substitutes five players who are currently out of the game for all of the in-game players.

Edit Key Function

- Press **<EDIT>** followed by any of the following keys to edit their respective values. **<RUNS+1>, <INNING+1>,<OUTS+1>, <HITS+1>, <ERRORS+1>, <LEFT ON BASE+1>, <PITCH COUNT STRIKES+1>, <PITCH COUNT BALLS+1>, <FOUL BALLS+1>, <INPLAY+1>**

All Sport 5000® Football

Note: Refer to **Section 8: Football Operation** for more detailed operating instructions**.**

Start-Up
- Turn the Power Switch **ON**.
- At the **Resume Game? Y/N** prompt:
  - Press **<ENTER /YES>** to resume the game where last shut off.

or
  - Press **<Clear/NO>** to enter a new sport code number.

Team Score
- **<SCORE+1>**, **<SCORE+2>**, **<SCORE+3>**, **<SCORE+6>**, and **<SCORE-1>** increment and decrement the team score.

Quarter
- **<QUARTER+1>** increments the quarter number.

Ball On
- **<BALL ON>** edits the current **Ball On** location.
- If the setting of **Ball On Auto Calculate** in **Edit Settings** is yes, the console will calculate **Down** and **Yards To Go** values from the **Ball On** value.
- When **<BALL ON>** is pressed, the console will prompt for side of field, and then display the **Down** and **Yards To Go** values for verification.

Down
- **<DOWN+1>** increments the down number.
- **<RECALL LAST DOWN>** only functions when the setting of **Ball On Auto Calculate** is yes. It will recall the **Ball On**, **Down**, and **Yards To Go** values of the previous play.

Yards To Go
- **<YARDS TO GO>** edits the current setting.

First and 10
<FIRST & 10> sets the **Down** value to 1 and the **Yards to go** value to 10 for a first down.

Time Out
- The first press of **<TIME OUT>** displays the number of full time outs for the selected team. The second press displays the number of partial timeouts (if applicable.) Press enter to take a time out for the selected team.

- The **<TIME OUT ON/OFF>** selects a full (1st press) or partial (2nd press) time out and starts the time out clock.
- The time out clock may be displayed on the main scoreboard using the **Time Outs Show on Main** setting in the **Menu** under **Edit Settings**.

Possession

- **<POSS>** turns the possession indicators on or off for the respective team.
- If the setting of **Ball On Auto Calculate** is yes, the console will prompt for the play direction to calculate down and yards to go values. Press **1** or **3** to indicate the new play direction.

Play Clock Time

- **<SET PLAY CLOCK>** changes the current value of the play clock timer. Pressing **<SET PLAY CLOCK>** a second or third time allows the reset values of the play clock timer to be edited.

Team Statistics

- **<YARDS RUSHING>** and **<YARDS PASSING>** edit their respective team total.
- **<FIRST DOWNS+1>** increments the number of first downs for the respective team.

Edit Key Function

- Press **<EDIT>** followed by any of the following keys to edit the respective value
  <SCORE+1>, **<SCORE-1>**, **<SCORE+2>**, **<SCORE+3>**, **<SCORE+6>**,
  <FIRST DOWNS+1>, **<QUARTER+1>**, **<DOWN+1>**, **<TIME OUT>,**
  <TIME OUT ON/OFF>

All Sport 5000® Hockey

Note: Refer to **Section 9: Hockey Operation** for more detailed operating instructions**.**

Start-Up
- Turn the Power Switch **ON**.
- At the **Resume Game? Y/N** prompt:
  - Press **<ENTER/YES>** to resume the game where last shut off.

or
  - Press **<CLEAR/NO>** to enter a new sport code number.

Team Score
- **<SCORE+1>** and **<SCORE-1>** increment and decrement the team score.

Time Out
- The first press of **<TIME OUT>** displays the number of full time outs for the selected team. The second press displays the number of partial timeouts (if applicable.) Press enter to take a time out for the selected team.
- The **<TIME OUT ON/OFF>** selects a full (1st press) or partial (2nd press) time out and starts the time out clock.
- The time out clock may be displayed on the main scoreboard using the **Time Outs Show on Main** setting in the **Menu** under **Edit Settings**.

Period
- **<PERIOD+1>** increments the current period number.

Shots on Goal
- **<SHOTS ON GOAL+1>** and **<SHOTS ON GOAL-1>** increment and decrement the team shots on goal.

Saves
- **<SAVES+1>** and **<SAVES-1>** increment and decrement the team goalie saves.

Penalty
- **<PENALTY>** turns on or off the penalty indicators for the selected team.
- **<PLAYER PENALTY>** sets the player number and penalty time for the selected team.
- **<MAJOR PENALTY>**, **<MINOR PENALTY>** set the penalty length to the configured values.
- **<DELETE PLAYER PENALTY>** deletes a player-penalty time. Each press scrolls through the list of player and
  penalty times for the selected team.
- **<CLEAR ALL PENALTIES>** deletes all player-penalty times for the selected team.

- **<ENABLE PENALTY CLOCKS>** and **<DISABLE PENALTY CLOCKS>** control the automatic decrement of the penalty clocks with the main clock. The current status is shown as an **EN** or **DS** in the bottom right corner of the LCD screen.

Edit Key Function

- Press **<EDIT>** followed by any of the following keys to edit the respective value **<SCORE+1>**, **<SCORE-1>, <SHOTS ON GOAL+1>, <SHOTS ON GOAL-1>**, **<SAVES+1>**, **<SAVES-1>, <PERIOD+1>, <TIME OUT ON/OFF>, <TIME OUT>**

All Sport 5000® Soccer

Note: Refer to **Section 12: Soccer Operation** for more detailed operating instructions**.**

Start-Up

- Turn the Power Switch **ON**.
- At the **Resume Game? Y/N** prompt:
  - Press **<ENTER /YES>** to resume the game where last shut off.

or

  - Press **<Clear/NO>** to enter a new sport code number.

Team Score

- **<SCORE+1>** and **<SCORE-1>** increment and decrement the team score.

Time Out

- The first press of **<TIME OUT>** displays the number of full time outs for the selected team. The second press displays the number of partial timeouts (if applicable.) Press enter to take a time out for the selected team.
- The **<TIME OUT ON/OFF>** selects a full (1st press) or partial (2nd press) time out and starts the time out clock.
- The time out clock may be displayed on the main scoreboard depending on the **Time Outs – Show on Main** setting in the **Menu** under **Edit Settings**.

Half

- **<HALF+1>** increments the current half number.

Shots on Goal

- **<SHOTS ON GOAL+1>** and **<SHOTS ON GOAL-1>** increment and decrement the team shots on goal.

Saves

- **<SAVES+1>** and **<SAVES-1>** increment and decrement the team goalie saves.

Penalty Kicks

- **<PENALTY KICKS+1>** and **<PENALTY KICKS-1>** increment and decrement the team penalty kicks.

Corner Kicks

- **<CORNER KICKS+1>** and **<CORNER KICKS-1>** increment and decrement the team corner kicks.

Fouls

- **<FOULS+1>** and **<FOULS-1>** increment and decrement the team fouls.

Edit Key Function

- Press **<EDIT>** followed by any of the following keys to edit the respective value
  <SCORE+1>, <SCORE-1>, <SHOTS ON GOAL+1>, < SHOTS ON GOAL-1>, <SAVES+1>, < SAVES-1>, <HALF+1>, <PENALTY KICKS+1>,
  <PENALTY KICKS-1>, <CORNER KICKS+1>, <CORNER KICKS-1>,
  <TIME OUT ON/OFF>,<TIME OUT>

All Sport 5000® Track

Note: Refer to **Section 12: Track Operation** for more detailed operating instructions**.**

Start-Up

- Turn the Power Switch **ON**.
- At the **Resume Game? Y/N** prompt:
  - Press **<ENTER /YES>** to resume the game where last shut off.

or

  - Press **<Clear/NO>** to enter a new sport code number.

Team Score

- **<SCORE+1>**, and score keys for home and guest 1 increment and edit the team total score.
- The **Guest 2** and **Guest 3** score keys can also edit team scores if the setting of **Guest 2,3 Value** is **Score**.

Reset

- **<RESET>** resets the main clock. This only applies to the manual input code (code 8601.)

Place

- **<PLACE>** edits the current place value.

Lane

- **<LANE>** edits the current lane value.

Events

- **<GUEST 2 SCORE/EVENT>** edits the current event value if the setting of **Guest 2,3 Value** is **Event/Heat.**
- The event value will be overwritten if the console is connected to an external timer.

Heat

- **<GUEST 3 SCORE/HEAT>** edits the current heat value if the setting of Guest 2,3 Value is **Event/Heat**.
- The heat value will be overwritten if the console is connected to an external timer.

Edit Key Function

- Press **<EDIT>** followed by **<SCORE+1>** to edit the current team score value.

All Sport 5000® Volleyball

Note: Refer to **Section 13: Volleyball Operation** for more detailed operating instructions**.**

Start-Up

- Turn the Power Switch **ON**.
- At the **Resume Game? Y/N** prompt:
  - Press **<ENTER /YES>** to resume the game where last shut off.

or

  - Press **<Clear/NO>** to enter a new sport code number.

Team Score

- **<SCORE+1>** and **<SCORE-1>** increment and decrement the team score.

Games Won

- **<GAMES WON+1>** increments the number of games won for the respective team.

Serve

- **<SERVE>** turns the serve indicators on or off for the respective team.

Game and Match Number

- **<GAME+1>** increments the game number. The current game number is shown in the bottom right corner of the LCD. Game scores will be reset to zero for the start of the next game. Press **<EDIT><GAME+1>** to recover the previous game scores.
- **<MATCH NUMBER+1>** increments the match number.

Aces, Blocks, Kills, Digs

- **<ACES+1>, <BLOCKS+1>, <KILLS+1>** and **<DIGS+1>** increment their respective team totals.
- The console may ask for a player number depending on the setting of **Team Stats – Update Player** in **Edit Settings**.
- Team statistics will be displayed based on the setting of **User Defined** settings for scoreboards displaying two of the stats.

Time Out

- The first press of **<TIME OUT>** displays the number of full time outs for the selected team. The second press displays the number of partial timeouts (if applicable.) Press enter to take a time out for the selected team.
- The **<TIME OUT ON/OFF>** selects a full (1st press) or partial (2nd press) time out and starts the time out clock.
- The time out clock may be displayed on the main scoreboard depending on the **Time Outs – Show on Main** setting in the **Menu** under **Edit Settings**.

Player Roster Keys

- **<PLAYER>** selects the player number for statistics edit. Pressing **<IN GAME>** or **<OUT OF GAME>** within the player statistics edit screen changes the status of the player selected. Press the left and right arrow keys to edit the aces, kills, blocks, and digs for the selected player. Press the up or down arrow keys to move to a different player.
- **<DELETE PLAYER>** deletes the selected player from the roster.

Player Substitution

- **<INDIV. SUB>** substitutes a player currently out of the game for a player who is in the game.
- **<MASS SUB>** substitutes six players who are currently out of the game for all of the in-game players.

Edit Key Function

- Press **<EDIT>** followed by any of the following keys to edit the respective value **<SCORE+1>**, **<SCORE-1>**, **<ACES+1>**, **<BLOCKS+1>**, **<KILLS+1>**, **<DIGS+1>**, **<TIME OUT>**, **<TIME OUT ON/OFF>, <GAMES WON+1>**, **<MATCH NUMBER+1>**, **<GAME+1>**
- Pressing the up or down arrow keys after pressing **<EDIT><SCORE+1>** scrolls through the game scores for the selected team.

All Sport 5000® Wrestling

Note: Refer to **Section 14: Wrestling Operation** for more detailed operating instructions**.**

Start-Up

- Turn the Power Switch **ON**.
- At the **Resume Game? Y/N** prompt:
  - Press **<ENTER /YES>** to resume the game where last shut off.

or

  - Press **<Clear/NO>** to enter a new sport code number.

Team Score

- **<SCORE+1>** and **<SCORE-1>** increment and decrement the team score.
- **<MATCH SCORE+1>**, **<MATCH SCORE+2>**, **<MATCH SCORE+3>**, and **<MATCH SCORE-1>** increment and decrement the match score.

Match Number

- **<MATCH NUMBER+1>** increments the match number.
- **<RESET MATCH>** resets the match score and sets match time to the configured Period length.

Period

- **<PERIOD+1>** increments the period number.

Injury and Blood Time

- **<START INJURY TIME>**, **<STOP INJURY TIME>**, **<START BLOOD TIME>** and **<STOP BLOOD TIME>** control the injury and blood time out timers.
- The Blood and Injury time can be displayed on the scoreboard using the **Blood/Injury Show on Main** setting in the **Menu** under **Edit Settings**.

Advantage Time

- **<HOME (GREEN) ADVANTAGE>**, **<GUEST (RED) ADVANTAGE>** and **<STOP ADVANTAGE CLOCK>** are used to control the advantage timer. Press the team advantage key to set the clock to decrease the opposing team advantage time or increase the selected team advantage time. Press the **<STOP ADVANTAGE CLOCK>** to stop the advantage timer.

Edit Key Function

- Press **<EDIT>** followed by any of the following keys to edit the respective value **<TEAM SCORE+1>**, **<TEAM SCORE-1>**, **<MATCH SCORE+1>**, **<MATCH SCORE-1>**, **<MATCH NUMBER>**, **<PERIOD+1>**, **<TIME OUT>, <TIME OUT ON/OFF>**
- Pressing **<EDIT>** and **<START INJURY TIME>**, **<STOP INJURY TIME>**, **<START BLOOD TIME>** or **<STOP BLOOD TIME>** while the time-out clock is stopped will edit the current value of the respective timer.